Kuwait University

CpE 569

by Dr. Mohamad Awad

Networking Basic

Network

- A network is a collection of computers and other devices that can send and receive data between each other.
- Each machine on a network is called a node.
- Nodes that are fully functional computers are also called hosts.
- Every network node has an address which is a series of bytes that uniquely identify it.
- Addresses are assigned differently on different kinds of networks.

Network Types

	Range	*Bandwidth (Mbps)*	*Latency (ms)*
LAN	1-2 kms	10-1000	1-10
WAN	worldwide	0.010-600	100-500
MAN	2-50 kms	1-150	10
Wireless LAN	0.15-1.5 km	2-11	5-20
Wireless WAN	worldwide	0.010-2	100-500
Internet	worldwide	0.010-2	100-500

The Internet

- The first computer-to-computer message was sent in 1969.
- https://www.youtube.com/watch?v=vuiBTJZfeo8
- Today the Internet consists of estimated
  - over 2 billion interconnected computers
  - over 1.4 billion users
  - in over 240 countries and regions
- The World Wide Web is the most important component of the internet.

Computer vs. Web Services

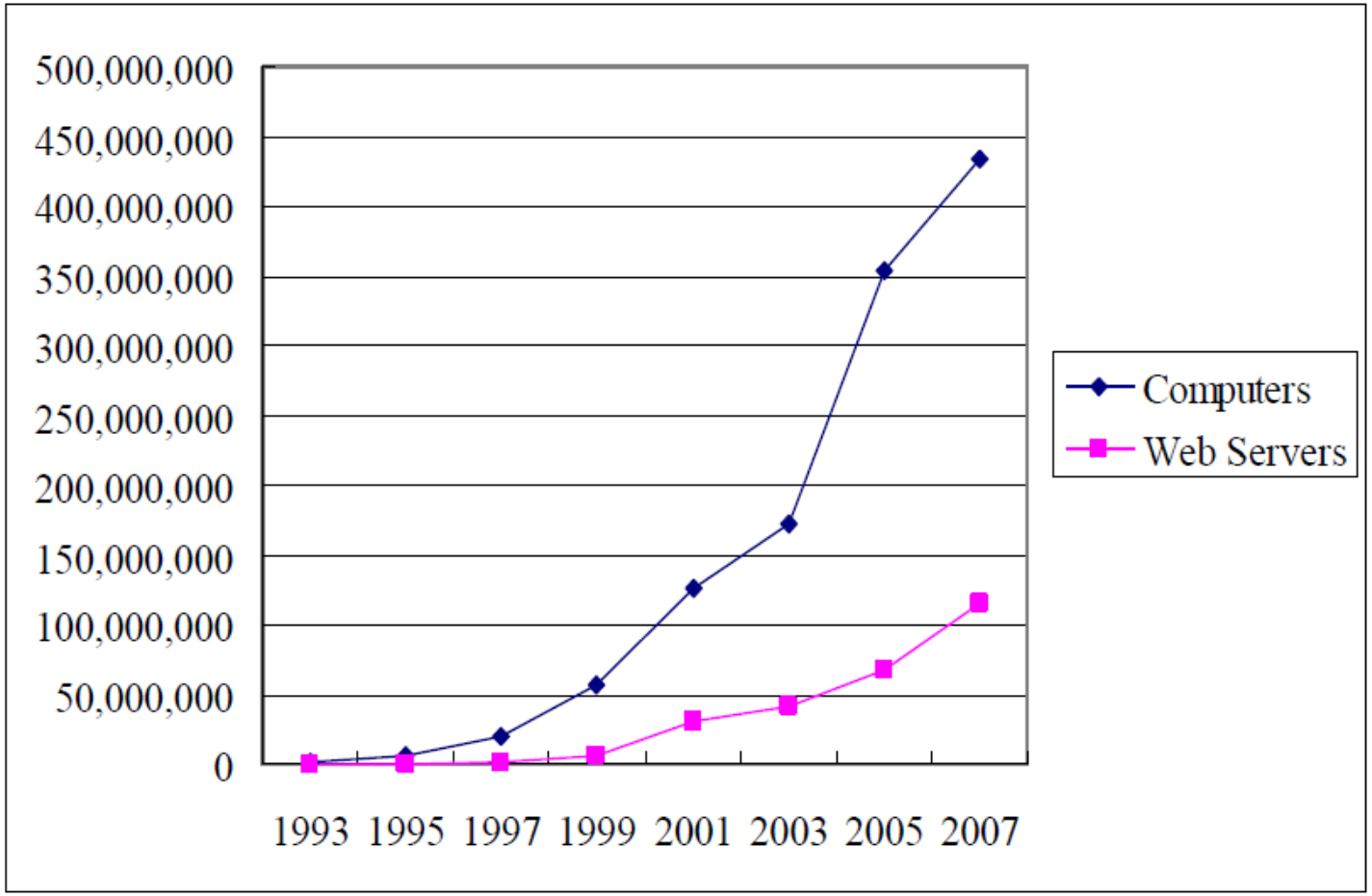

What's the Internet: "Nuts & Bolts" View

- Millions of connected computing devices running **network apps**:
  - hosts, end-systems
  - PCs, workstations, servers
  - PDAs, phones, toasters
- Communication links:
  - Fiber, copper, radio, satellite
- Routers: forward packets (chunks) of data thru network

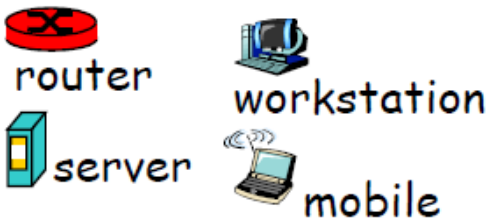

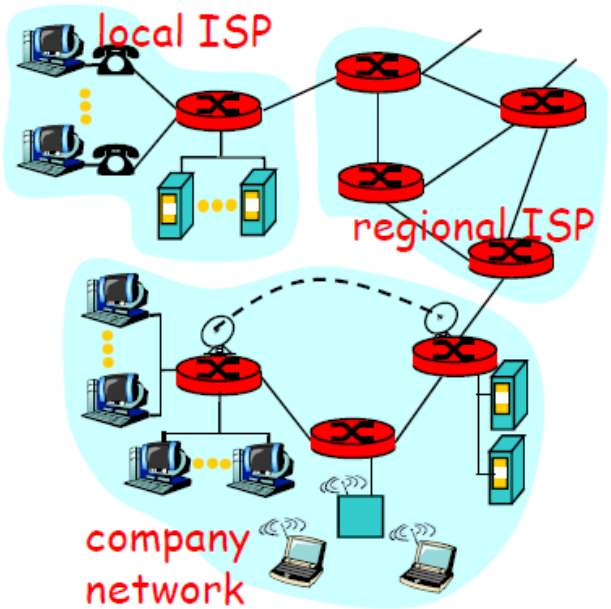

What's the Internet: "Nuts & Bolts" View

- Protocols: control sending/receiving of message
  - TCP, IP, HTTP, FTP, …
- Internet: "network of networks"
  - loosely hierarchical
  - public **Internet** versus private **intranet**
- Internet Standards:
  - RFC: Request For Comments
  - IETF: Internet Engineering Task Force

What's the Internet: A Service View

- Communication Infrastructure enables distributed applications:
  - WWW, email, games, database, voting, …
  - more?
- Communication Services:
  - Connectionless
  - Connection-oriented

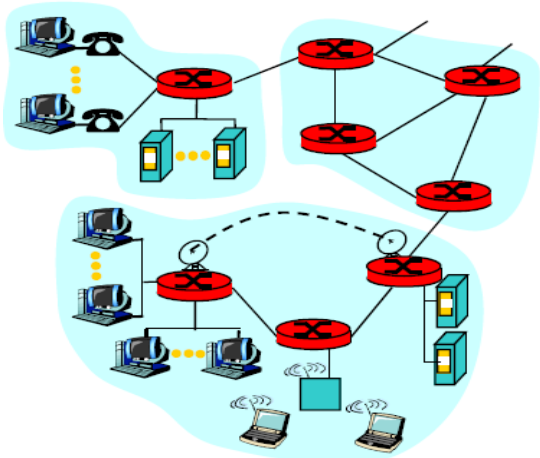

Usage of Internet

- Web-browsing (World Wide Web)
- E-mail
- Telnet (remote login to another computer)
- FTP (transfer files between computers)
- Newsgroups / Chat rooms
- E-commerce
- Multimedia & games
- Scientific applications
- …

World Wide Web

- The World Wide Web (WWW) is an
- information sharing system based on
  - inter-linked documents (web-pages)
  - that can be accessed over the Internet and
  - viewed graphically (using a web-browser)
- Located via a URL (Uniform Resource
- Locator):
  - <protocol>://<internet address>/page
    - http://kuweb.ku.edu.kw/ku/index.htm

Switching Schemes

- Broadcast
  - Ethernet, token ring
- Circuit switching
  - PSTN (circuit switching network)
- Packet switching
  - IP (store-and-forward network)
- Frame relay
  - SONET (passing frames through hosts)
- Cell switching
  - ATM

Network Communication

- Nodes may also have names. Names are not locked to addresses.
- All modern networks are packet-switched networks.
- A protocol is a precise set of rules and data format defining how computers communicate.
- Network communication is layered.
- Each layer represents a different level of abstraction.

What's a Protocol?

Human protocols:

- "What's the time?"
- "I have a question"
- Introductions

… specific messages sent

… specific actions taken when messages received, or other events

Network protocols:

- Machines rather than humans
- All communication activity in internet governed by protocols
- Protocols define format, order of messages sent and received among network entities, and actions taken on message transmission, receipt

What’s a Protocol?

A human protocol & a computer network protocol:

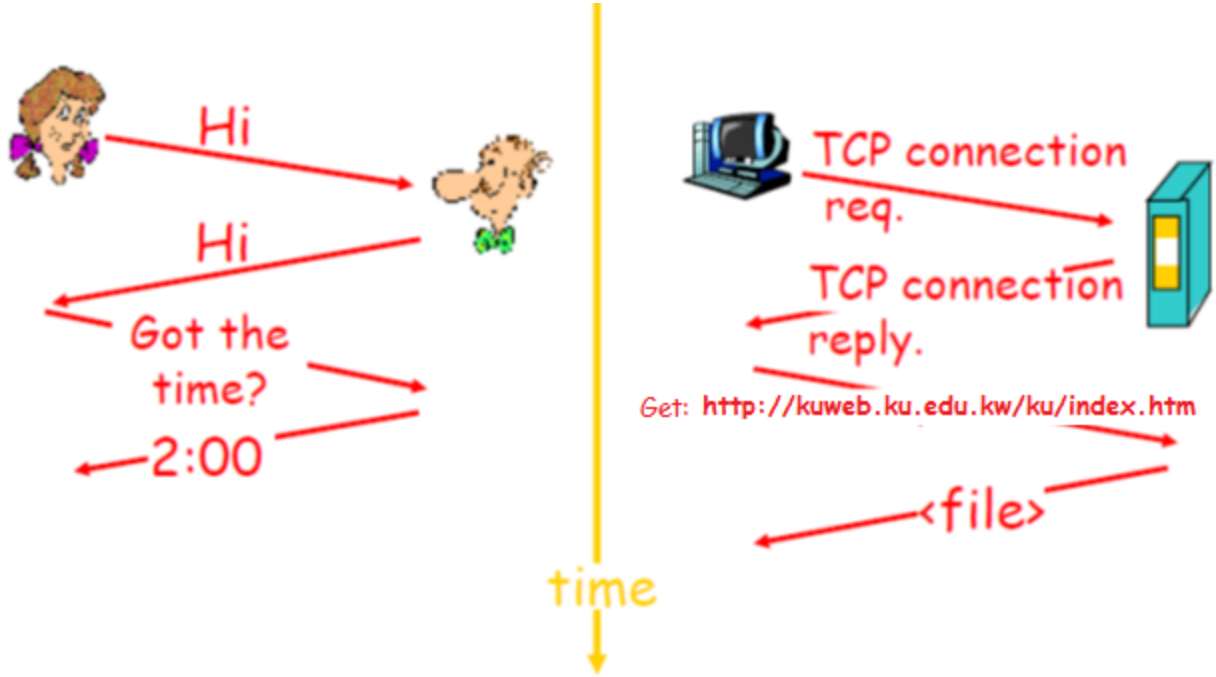

Network Models

- Using a formal model allows us to deal with various aspects of networks abstractly.
- We will look at a popular model (OSI reference model).
- The OSI reference model is a layered model.

Layering

- Divide a task into pieces and then solve each piece independently (or nearly so).
- Establishing a well-defined interface between layers makes porting easier.
- Major Advantages:
  - Abstraction
  - Modularity
  - Code Reuse
  - Extensibility

Layers in Sending a Letter

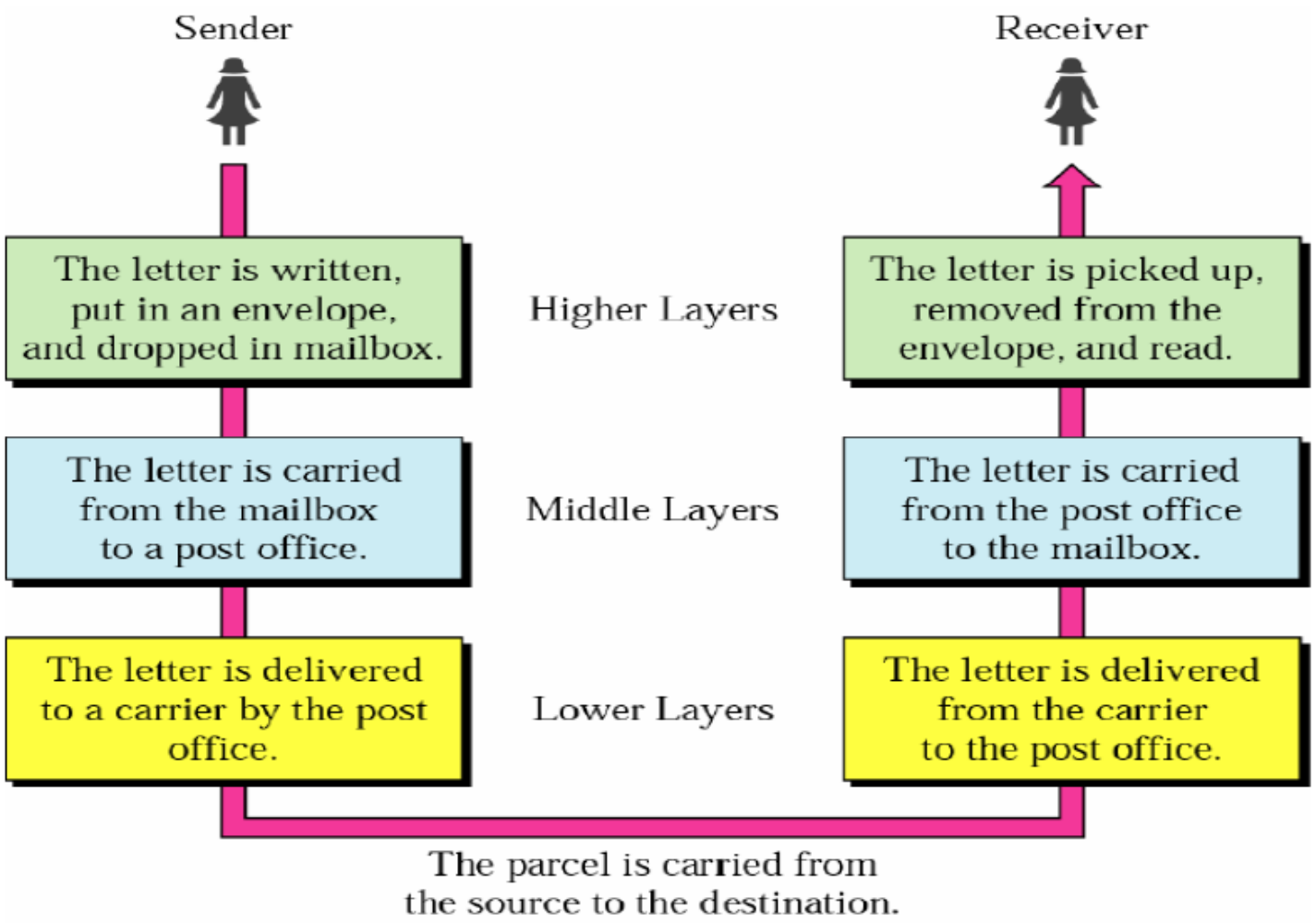

Layering Example: Federal Express

- Letter in envelope, address on outside
- FedX guy adds addressing information, barcode.
- Local office drives to airport and delivers to hub.
- Sent via airplane to nearest city.
- Delivered to right office
- Delivered to right person

FedX Layers

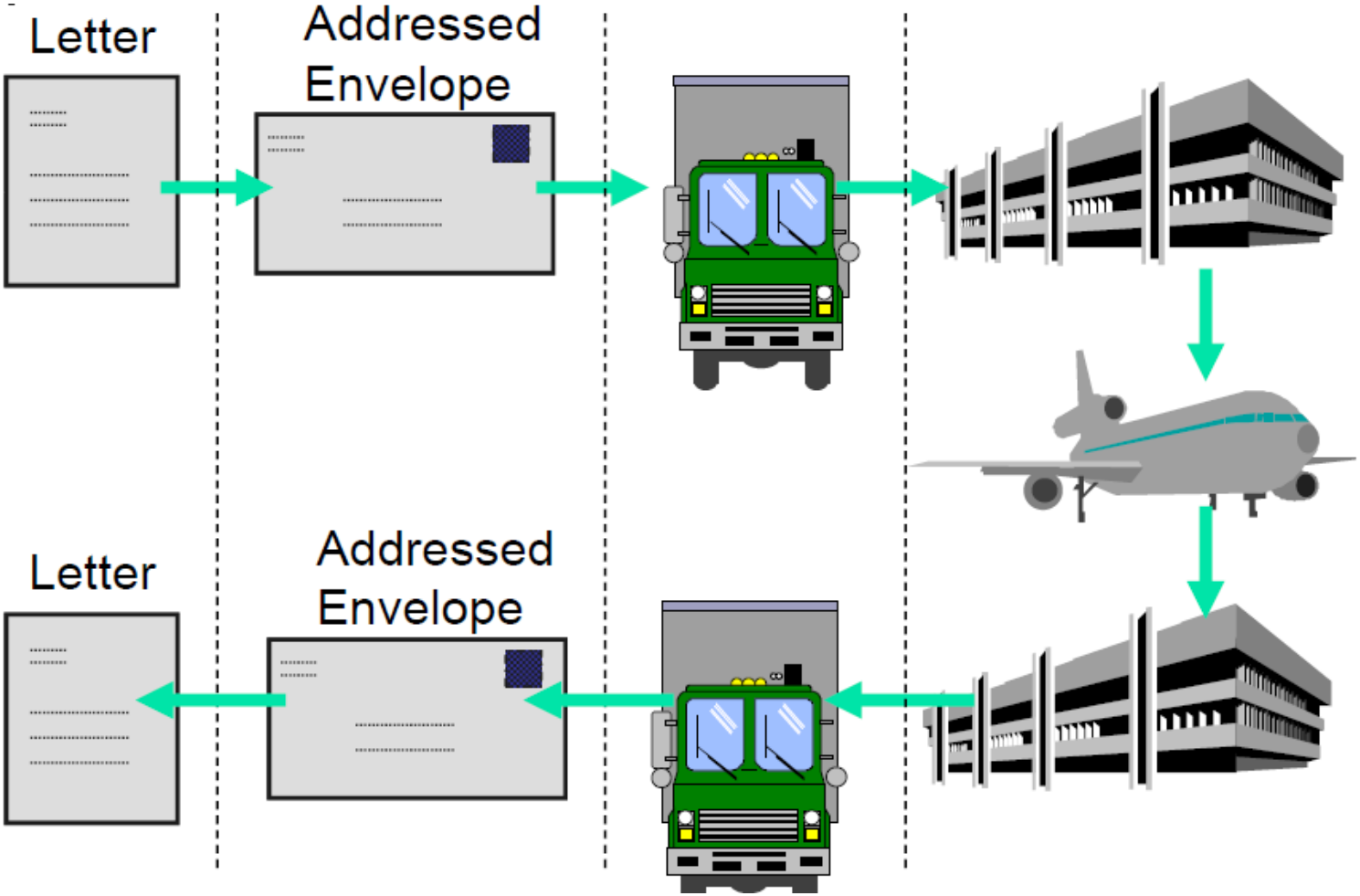

Layering of Protocols

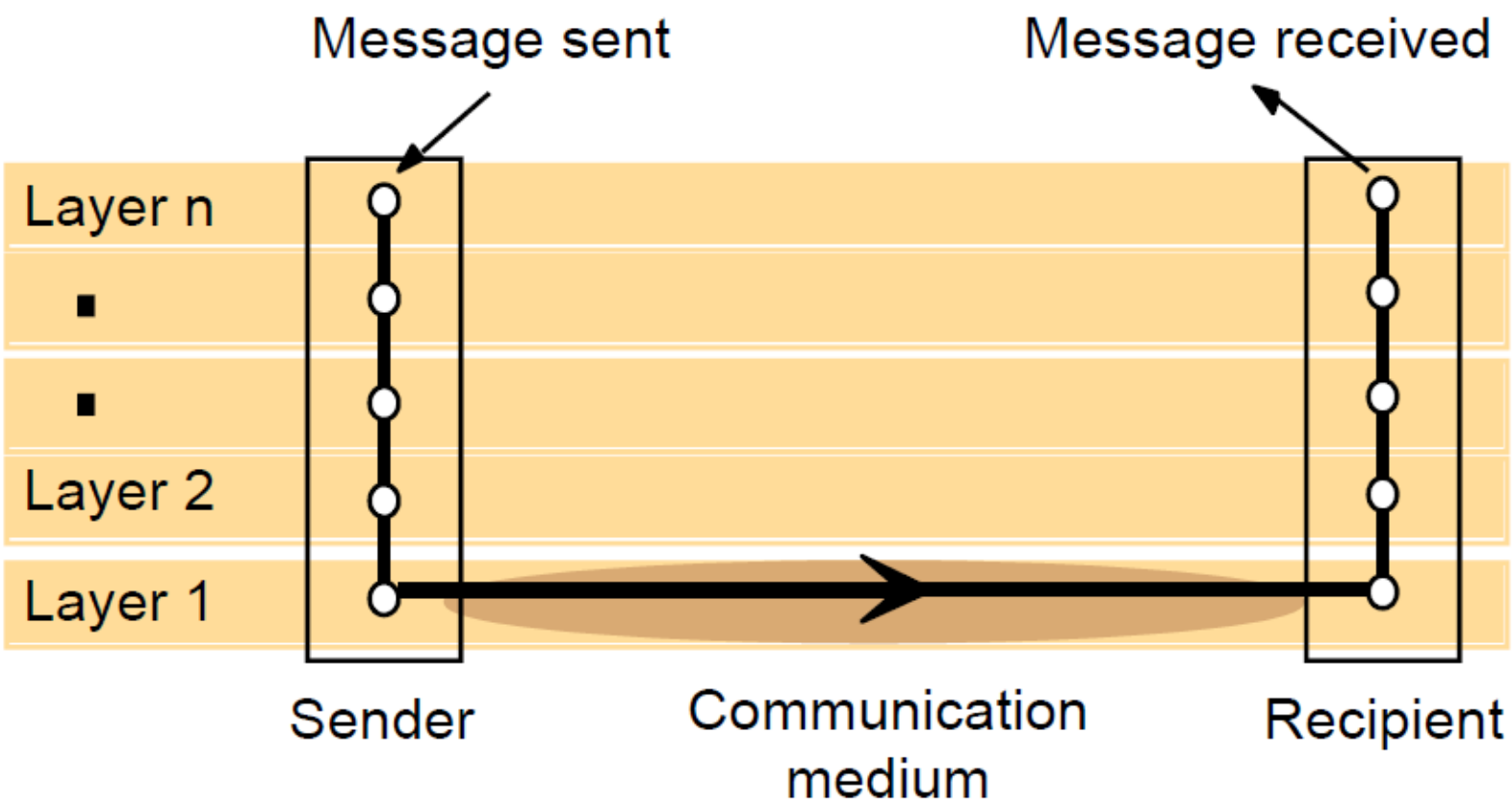

OSI Reference Model

The *International Standards Organization* (*ISO*) proposal for the standardization of the various protocols used in computer networks (specifically those networks used to connect open systems) is called the *Open Systems Interconnection Reference Model* (1984), or simply the *OSI model*.

OSI Model

Although the OSI model is a just a model (not a specification), it is generally regarded as the most complete model (as well it should be - nearly all of the popular network protocol suites in use today were developed before the OSI model was defined).

OSI – Network Software

- Although this course is about network programming (and not about networking in general), an understanding of a complete network model is essential.
- We will look at the OSI Reference Model in detail.

OSI Protocol Layers

- The ISO *Open Systems Interconnection (OSI)* model

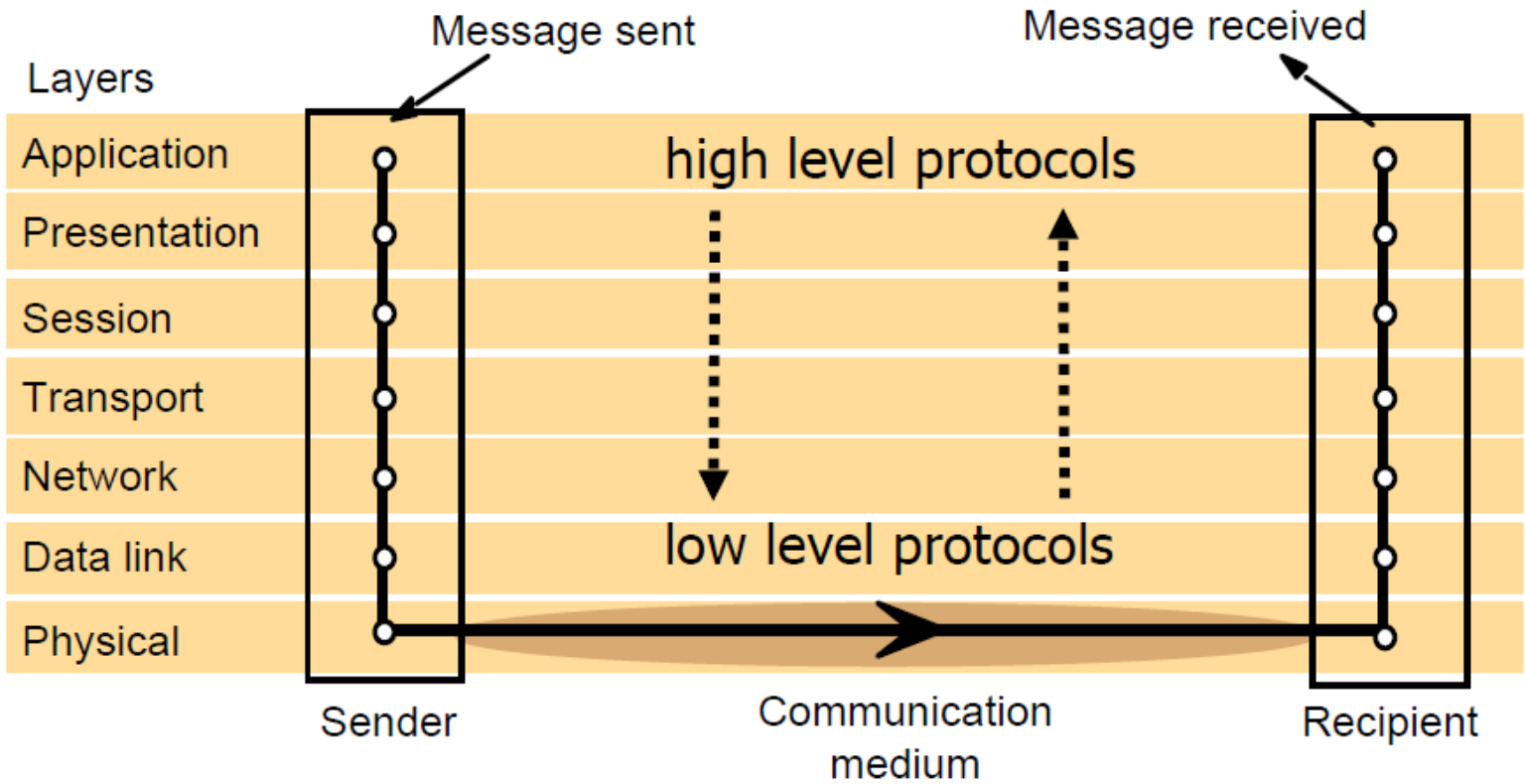

OSI Protocol Summary

- *Physical:* defines the cable or physical medium used to link nodes
- *Data Link:* defines the network packet format
- *Network:* routing packets across network
- *Transport:* divides messages into packets, ensures ordered delivery
- *Session:* establishes, maintains and ends sessions
- *Presentation:* transmits data in network representation(conversion, encryption, …)
- *Application:* application services

OSI Protocol Summary

Layer	*Description*	*Examples*
Application	To meet the communication requirements of specific applications, often defining the interface to a service.	HTTP, FTP , SMTP, CORBA IIOP
Presentation	Transmit data in a network representation that is independent of the representations used in individual computers, which may differ. Encryption is also performed in this layer, if required.	Secure Sockets (SSL),CORBA Data Rep.
Session	At this level reliability and adaptation are performed, such as detection of failures and automatic recovery.	
Transport	This is the lowest level at which messages (rather than packets) are handle Messages are addressed to communication ports attached to processes, Protocols in this layer may be connection-oriented or connectionless.	TCP, UDP
Network	Transfers data packets between computers in a specific network. In a WAN or an internetwork this involves the generation of a route passing through routers. In a single LAN no routing is required.	IP, ATM virtual circuits
Data link	Responsible for transmission of packets between nodes that are directly connected by a physical link. In a WAN transmission is between pairs of routers or between routers and hosts. In a LAN it is between any pair of hosts.	Ethernet MAC, ATM cell transfer, PPP
Physical	The circuits and hardware that drive the network. It transmits sequences of binary data by analogue signalling, using amplitude or frequency modulation of electrical signals (on cable circuits), light signals (on fibre optic circuits) or other electromagnetic signals (on radio and microwave circuits).	Ethernet base- band signalling, ISDN

Internet Protocol Layers

- The Internet connection can be simplified into a four(five)-layer model. Each layer only talks to the layers immediately above and below it.
- Layers model reduces complexity and increase modularity.

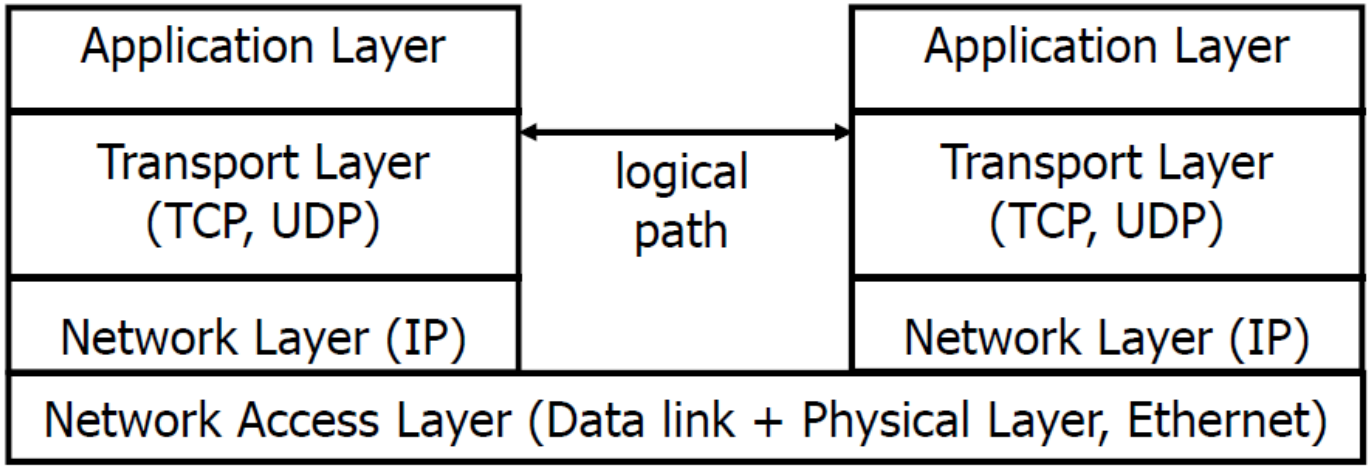

Simplified Network Model

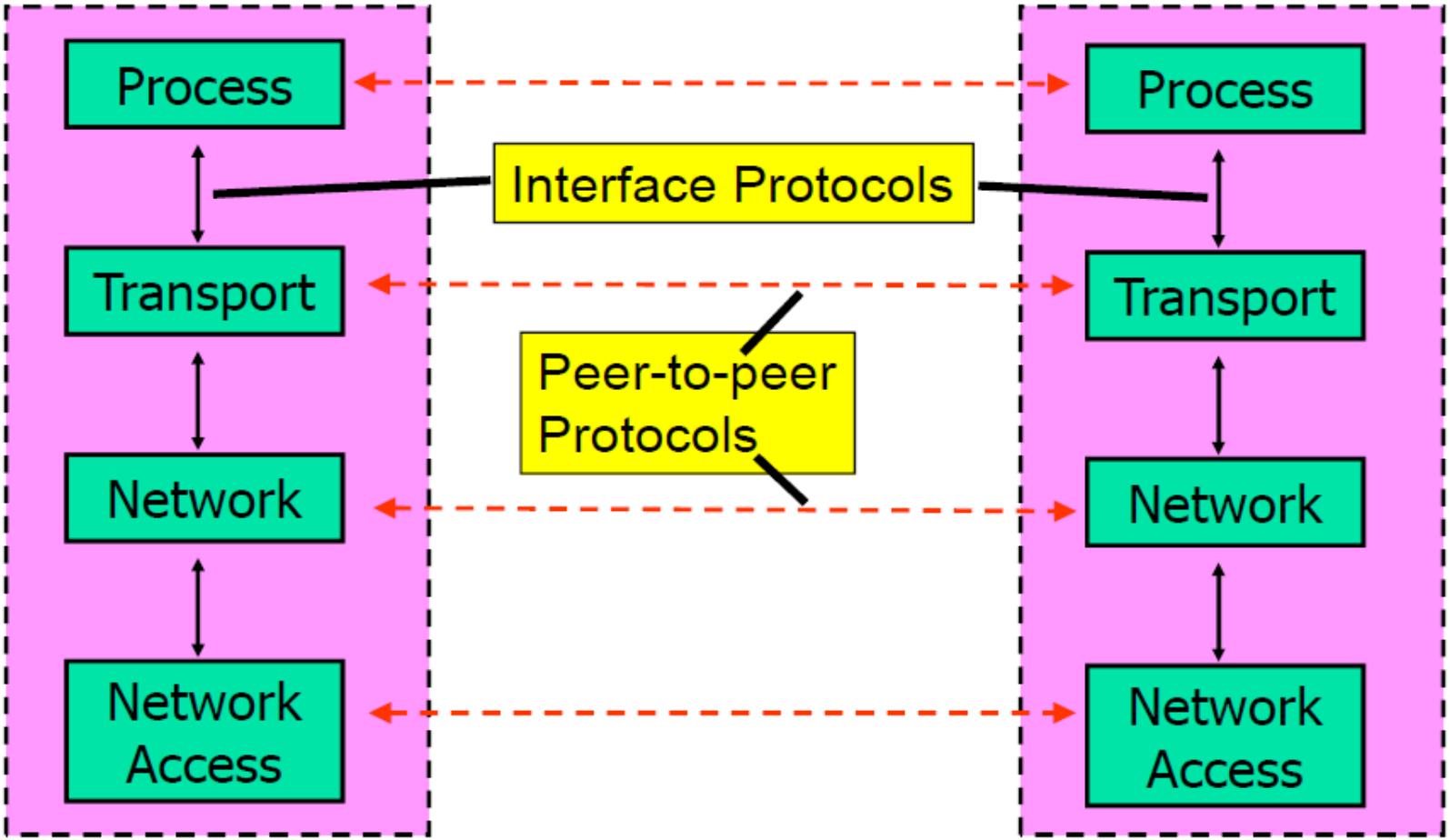

Interface & Peer-to-peer Protocols

- Interface Protocols describe the communication between layers on the same endpoint

- Peer-to-peer protocols describe communication between peers at the same layer

Peer-to-peer & Interface Protocols

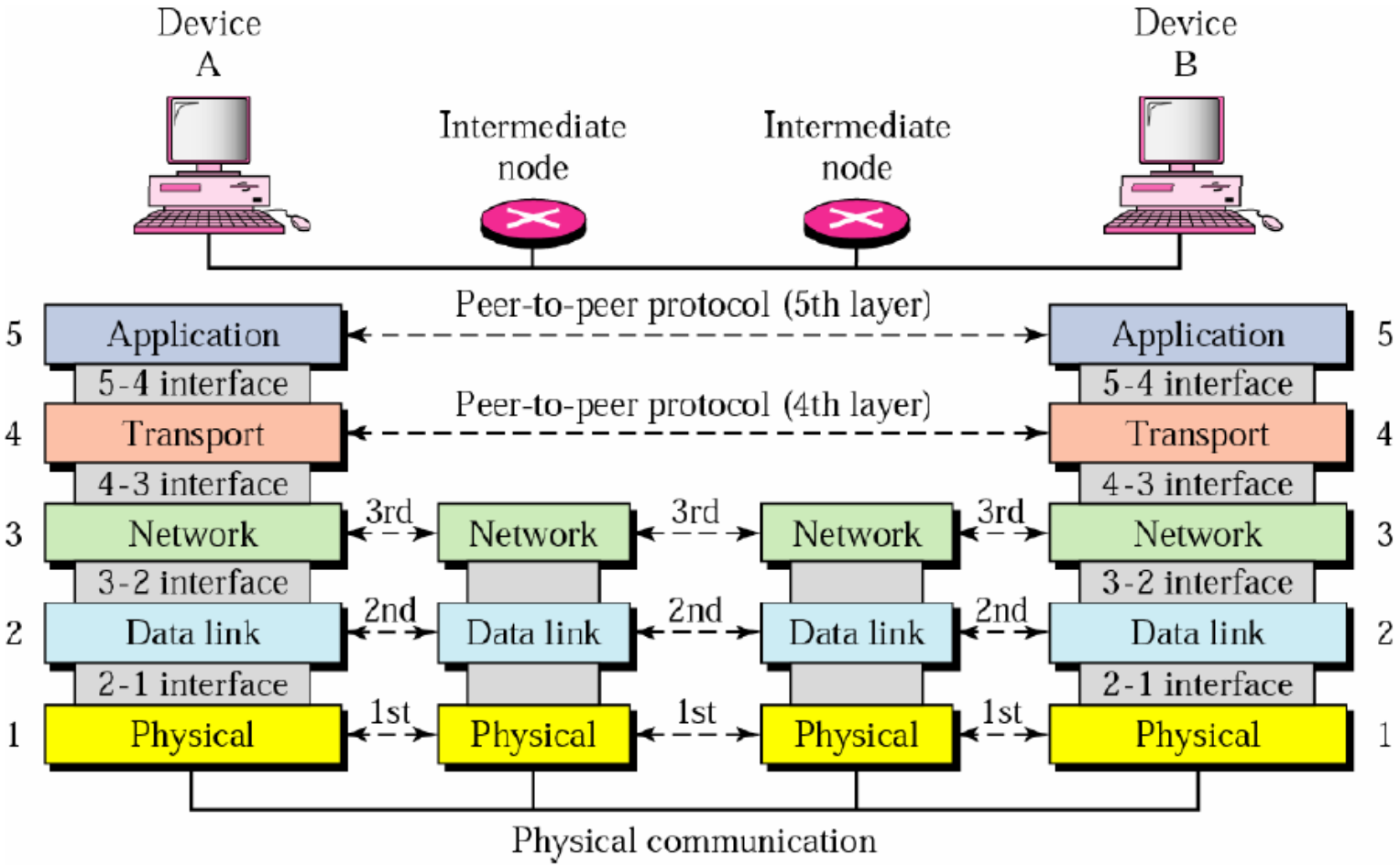

Message Exchange

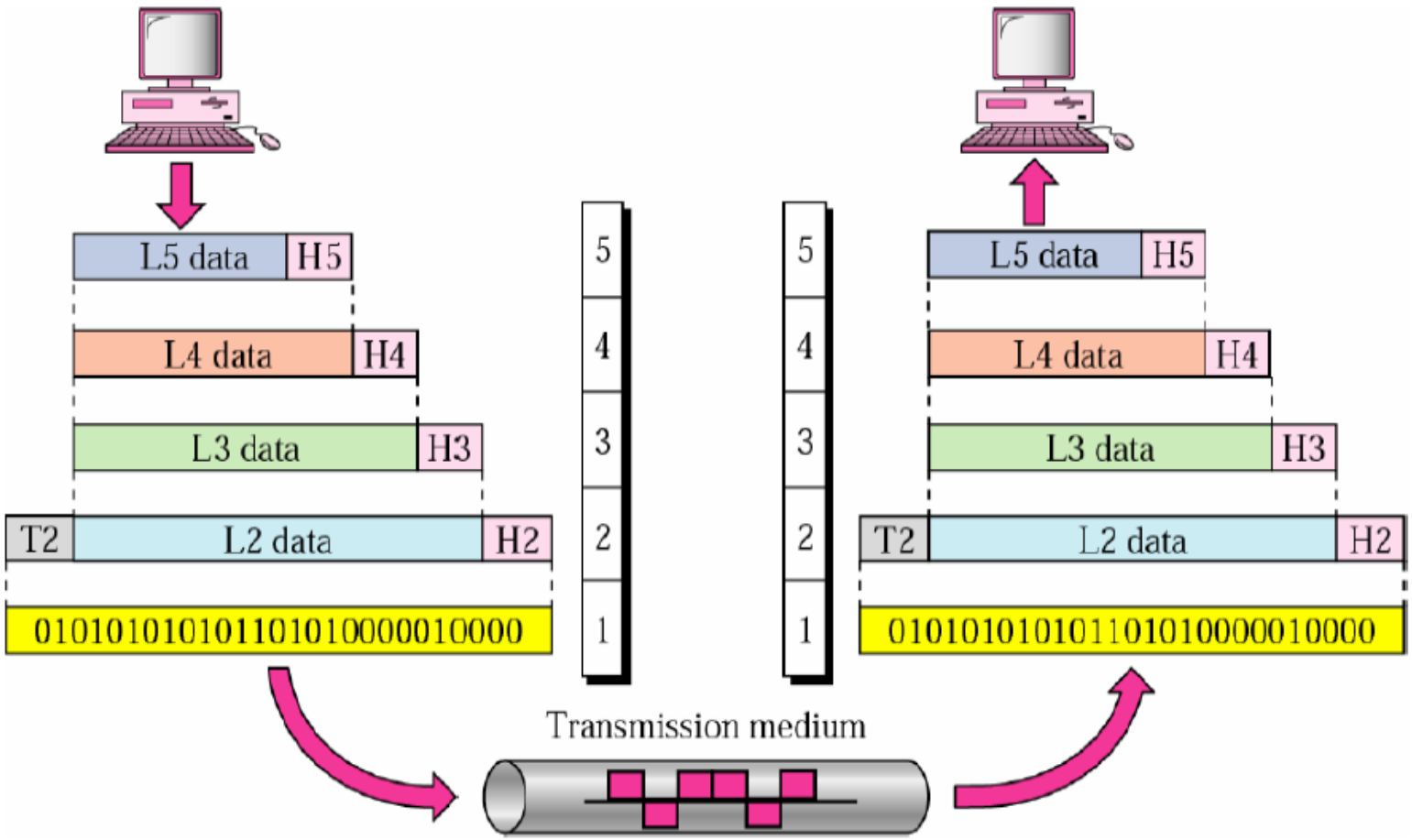

Physical Layer

- The physical layer is responsible for transmitting individual bits from one node to the next.

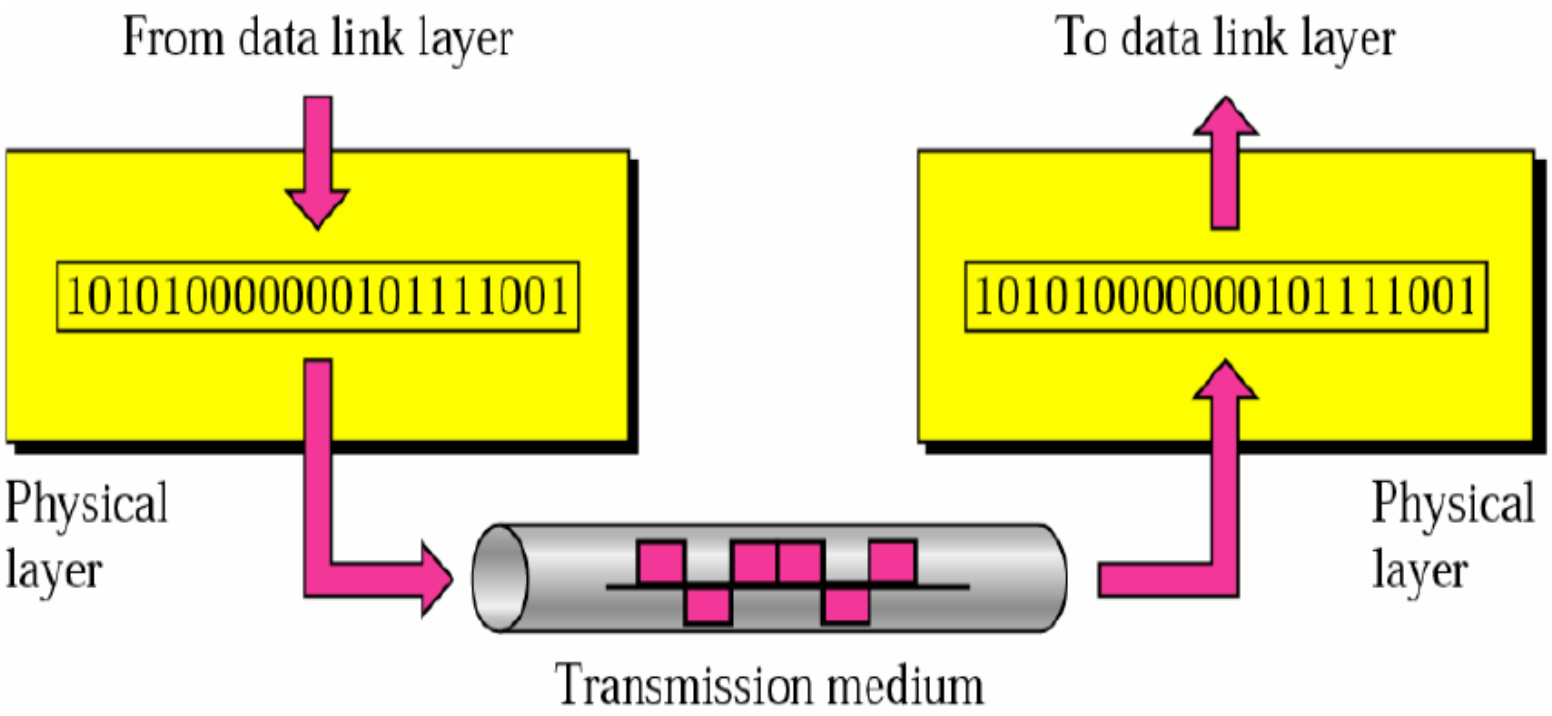

Data Link Layer

- The data link layer is responsible for transmitting network packets (frames) from one node to the next.

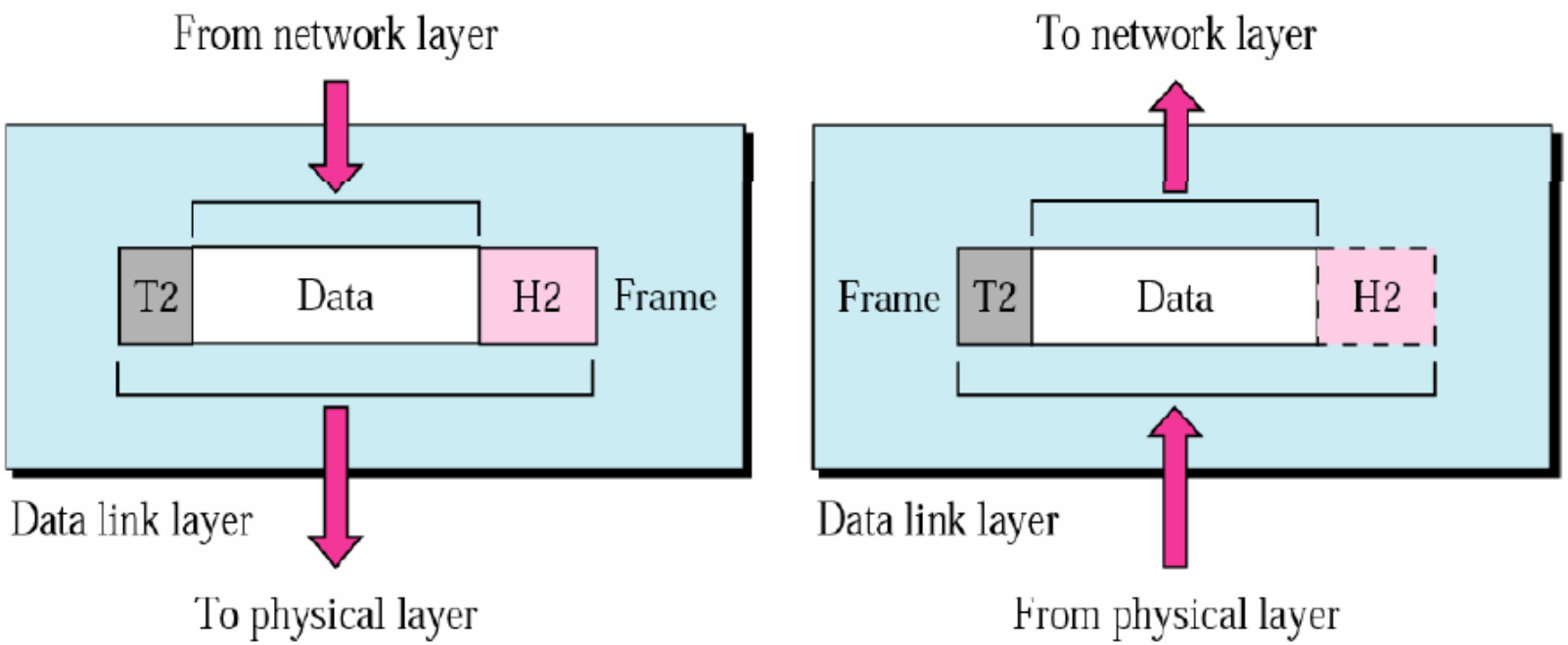

The Network Access Layer

- It is the physical layer + data link layer
- The actual wires used to connect different computers make up the **physical layer**.
  - packets of electricity → bits and bytes.
  - Digital-to-analog(sending), Analog-to-digital(receiving)
- Error correction and redundancy are done in the **data link layer**. (Ethernet)
- A specific data link layer requires specialized hardware. (Bridges: convert information from one type to another.)
- ***For Java network programming, we don't need to worry about either of the two layers.***

Node-to-node Delivery

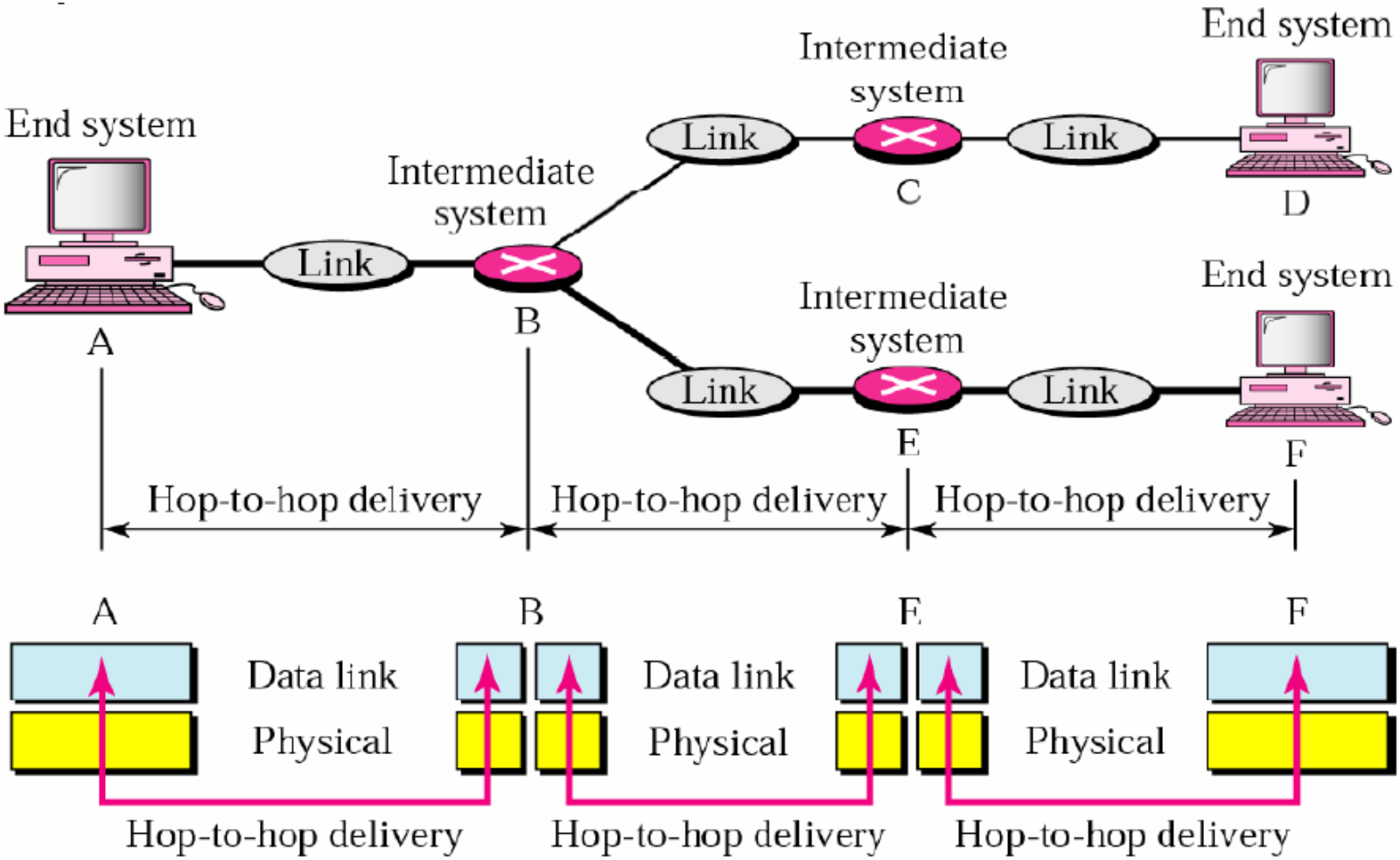

Network Layer

- The network layer is responsible for the delivery of packets from the original source to the final destination.

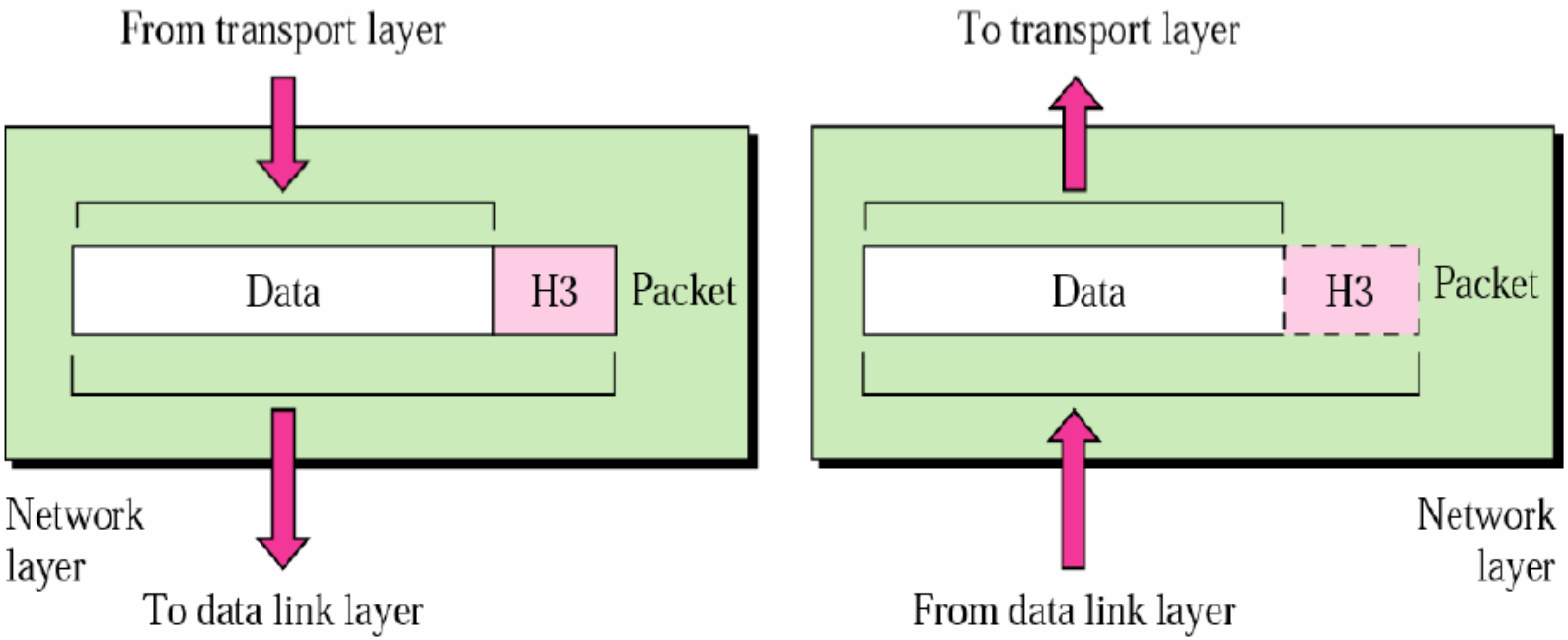

The Network Layer

- A protocol defines how bits and bytes are organized into packets, and the addressing scheme by which different machines find each other.
- Internet Protocol **(**IP**)**: the most popular one
- Others: IPX(Netware), AppleTalk(Macintoshes)
- Internet layer protocols are hardware-independent.
- Data is sent in packets called datagrams.
- Each IP datagram contains a header (20 ~ 60 bytes) and a payload (up to 65515 bytes).
- The header contains the protocol version no. and the addresses of the sending and receiving hosts.

Source-to-Destination Delivery

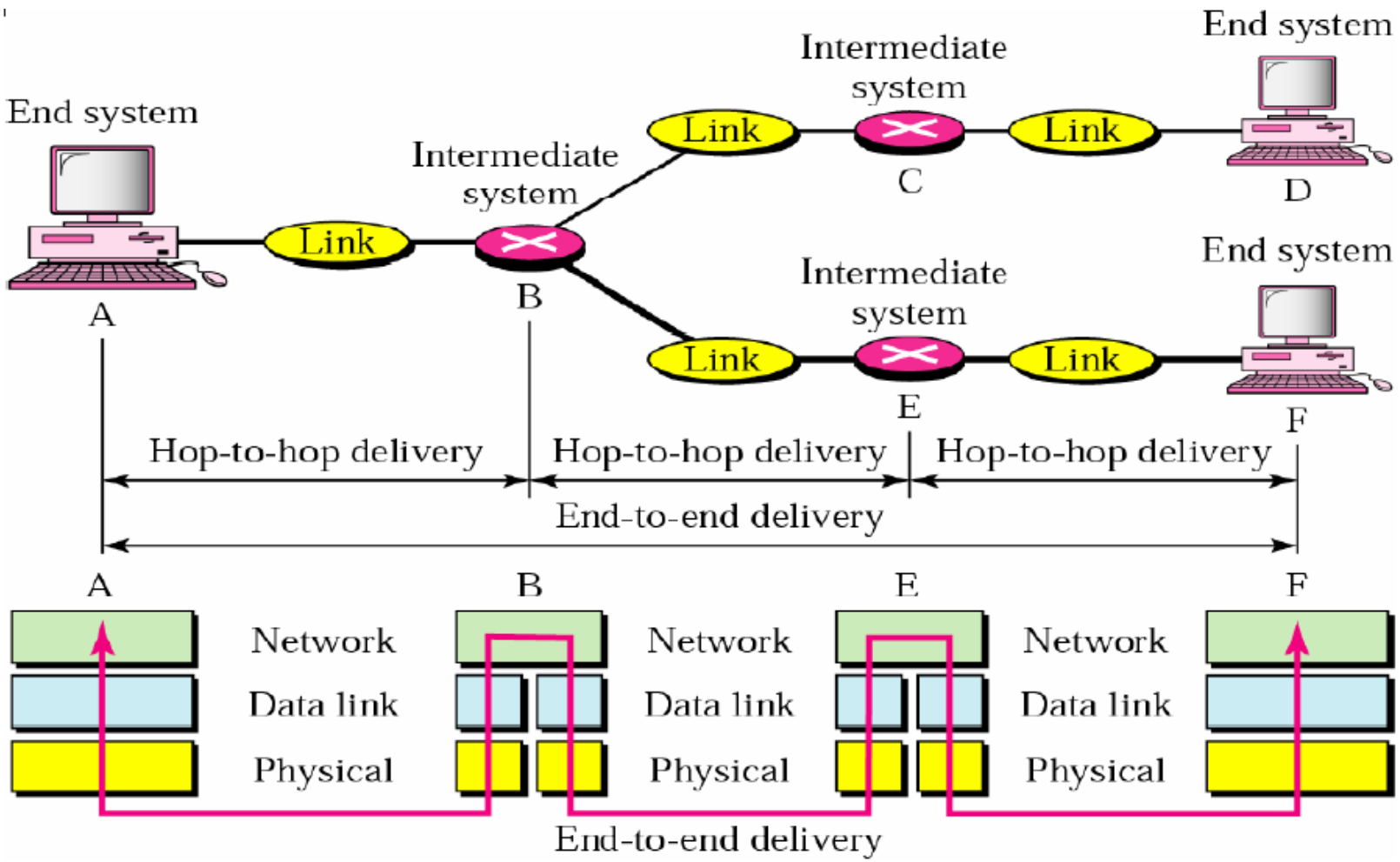

Transport Layer

- The transport layer is responsible for delivery of a message from one process to another.

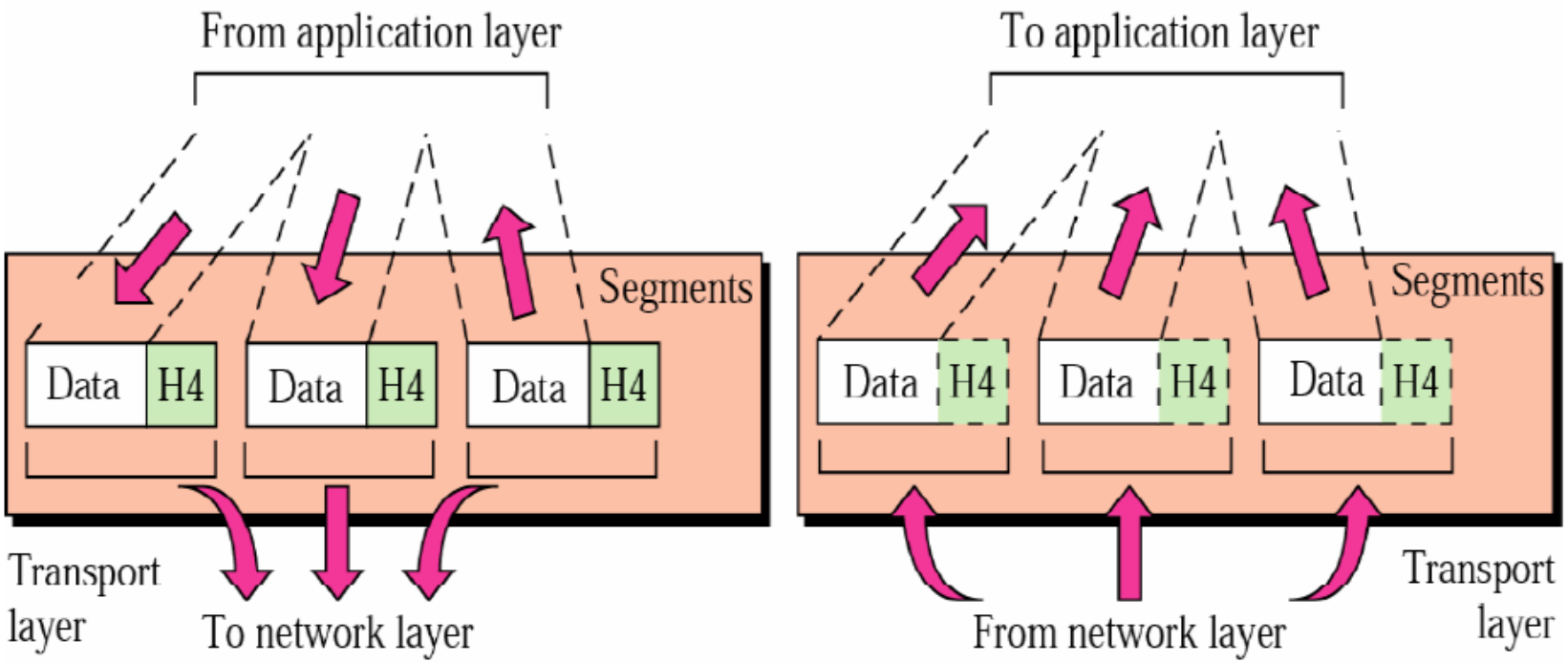

The Transport Layer

- Datagrams may not be delivered or arrived orderly.
- Responsible for ensuring that packets are received in the order sent and that no data is lost.
- Lost packets must be retransmitted.
- Two primary protocols: **TCP** and **UDP**.
- The Transmission Control Protocol **(**TCP**)** is a **reliable** protocol that guarantees the order of packets and no data lost, with higher overhead.
- The User Datagram Protocol **(**UDP**)** is an **unreliable** protocol that does not guarantee correct delivery of packets, but much faster.

Transport Layer Communication

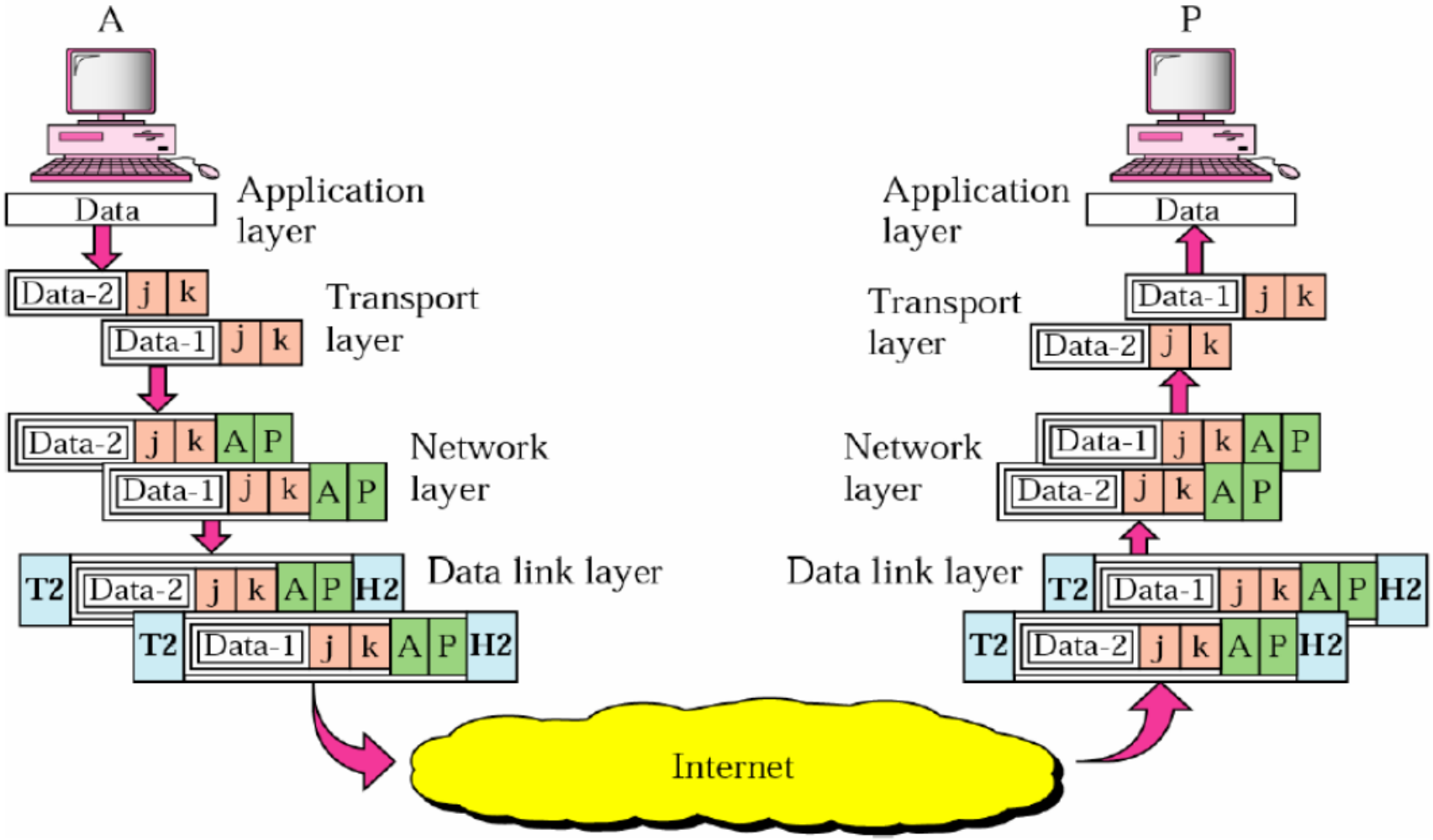

Application Layer

- The application layer is responsible for providing services to the user.

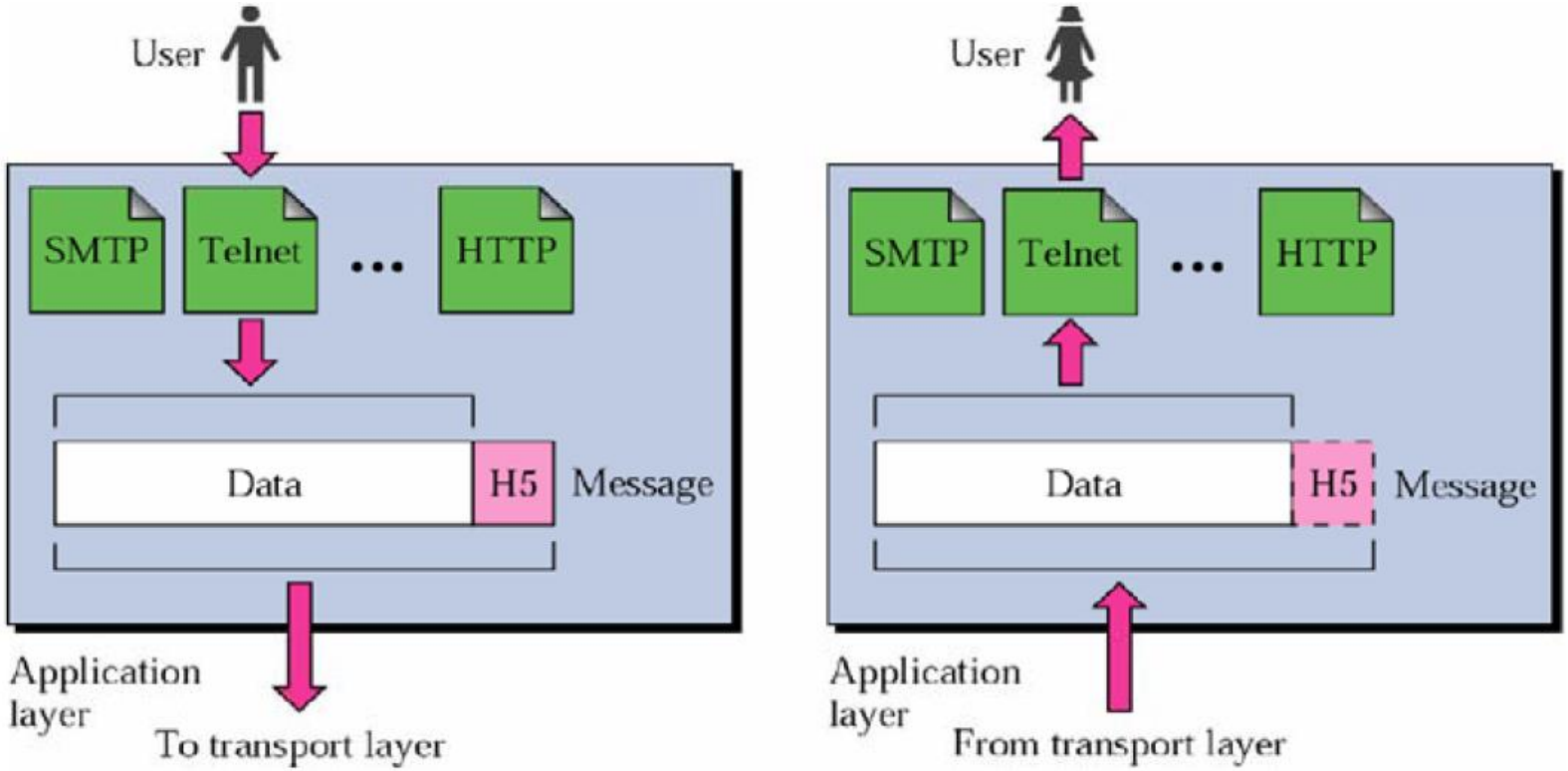

The Application Layer

- Deliver data to and from the application processes.
- Lower layers define **how** data is transferred.
- The application layer decides **what** to do with that data and **when** it's transferred.
- **Example**: HTTP makes sure that your browser knows to display an image as a picture, not a long stream of numbers.
- **Examples**: SMTP and POP for email, FTP for file transfer, NNTP for news, …
- The way these four(five) layers work together is called **encapsulation**.

Protocol Encapsulation

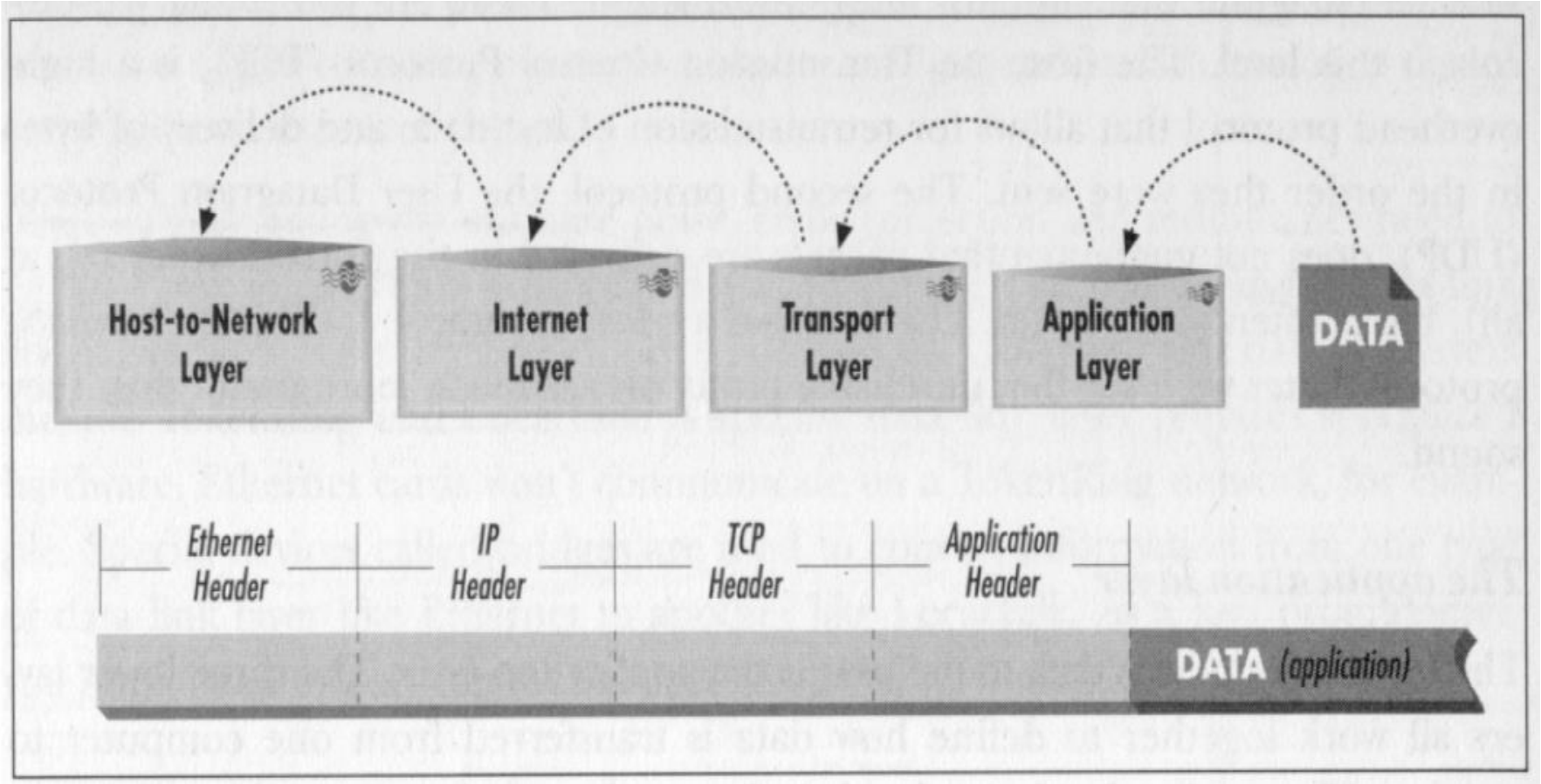

Summary of Duties

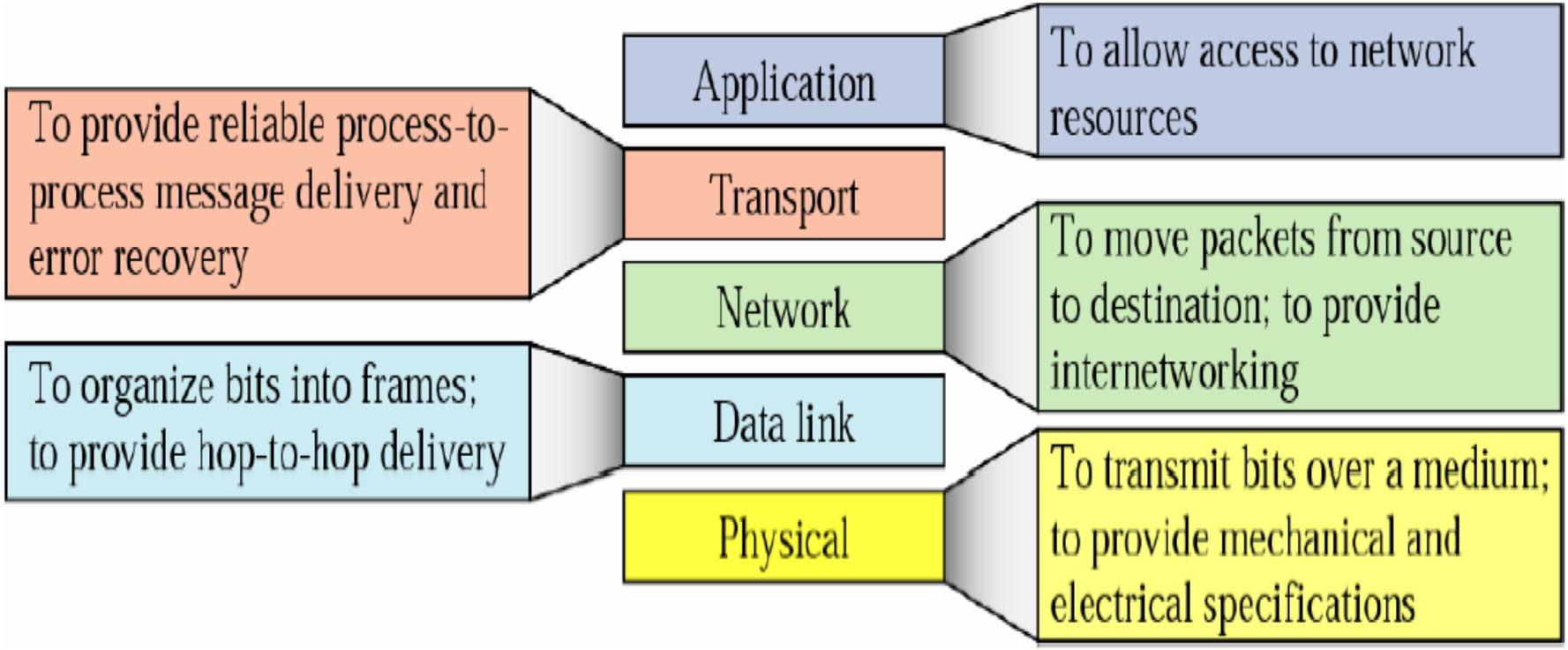

What Exactly is a Protocol?

- An agreed upon convention for communication.
  - both endpoints need to understand the protocol.
- Protocols must be formally defined and unambiguous!

Protocols

- A *protocol* is a set of rules that governs how two or more communicating entities in a layer are to interact
- *Messages* that can be sent and received
- *Actions* that are to be taken when a certain event occurs, e.g. sending or receiving messages, expiry of timers
- **The purpose of a protocol is to provide a service to the layer above**

Layering & Headers

- Each layer needs to add some control information to the data in order to do it's job.
- This information is typically prepended to the data before being given to the lower layer.
- Once the lower layers deliver the data and control information - the peer layer uses the control information.

What are the Headers?

- *Physical*: no header – just a bunch of bits.

- *Data link*:
  - Address of the receiving endpoint(s)
  - Address of the sending endpoint
  - Length of the data
  - checksum

Network Layer Header - Examples

- Protocol suite version
- Type of service
- Length of data
- Packet identifier
- Fragment number
- Time To Live (TTL)
- Protocol
- Header checksum
- Source network address
- Destination network address

Important Summary

- **Data-Link**: communication between machines on the same network.
- **Network**: communication between machines on possibly different networks.
- **Transport**: communication between processes (running on machines on possibly different networks).

Internetworking Issues

- Routing
- Congestion control
- Addressing
- Interconnections:
  - Repeaters
  - Routers
  - Bridges
  - Hubs
  - Switches
  - Gateways

Connecting Networks

- Repeater: physical layer
- Bridge: data link layer
- Router: network layer
- Gateway: network layer and above

Repeater

- Copies bits from one network to another
- Does not look at any bits
- Allows the extension of a network beyond physical length limitations

Bridge

- Copies frames from one network to another
- Can operate selectively - does not copy all frames (must look at data-link headers).
- Extends the network beyond physical length limitations.

Router

- Copies packets from one network to another.
- Makes decisions about what route a packet should take (looks at network headers).

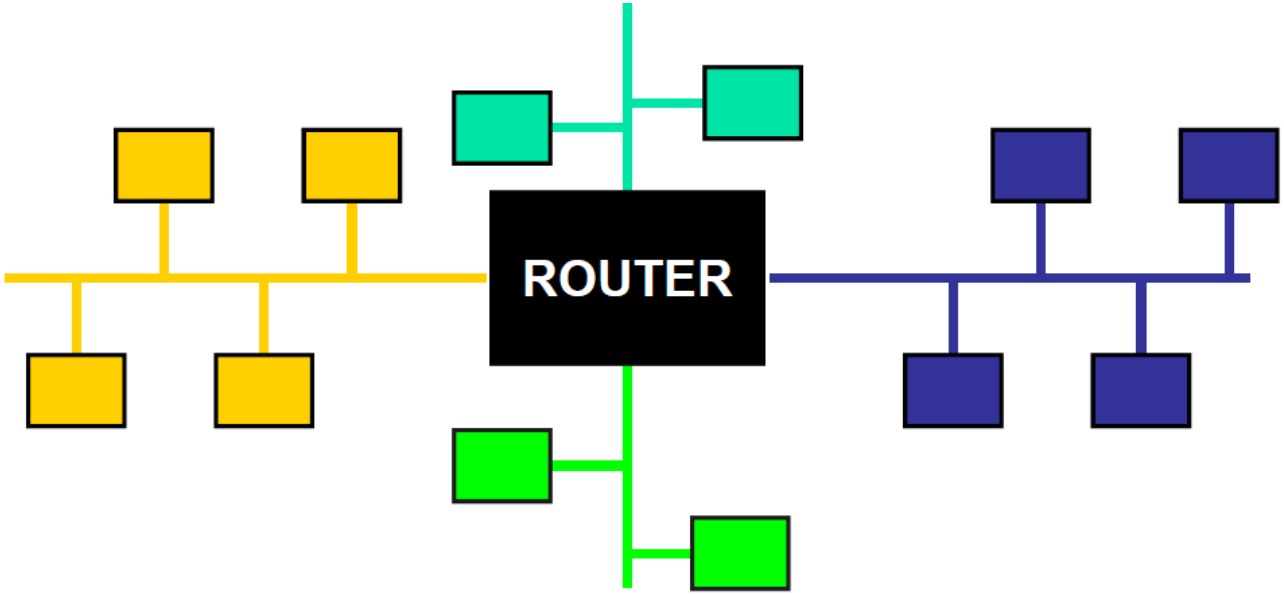

Gateway

- Operates as a router
- Data conversions above the network layer.
- Conversions:
  - encapsulation - use an intermediate network
  - translation - connect different application protocols
  - encryption - could be done by a gateway

Routing in WAN

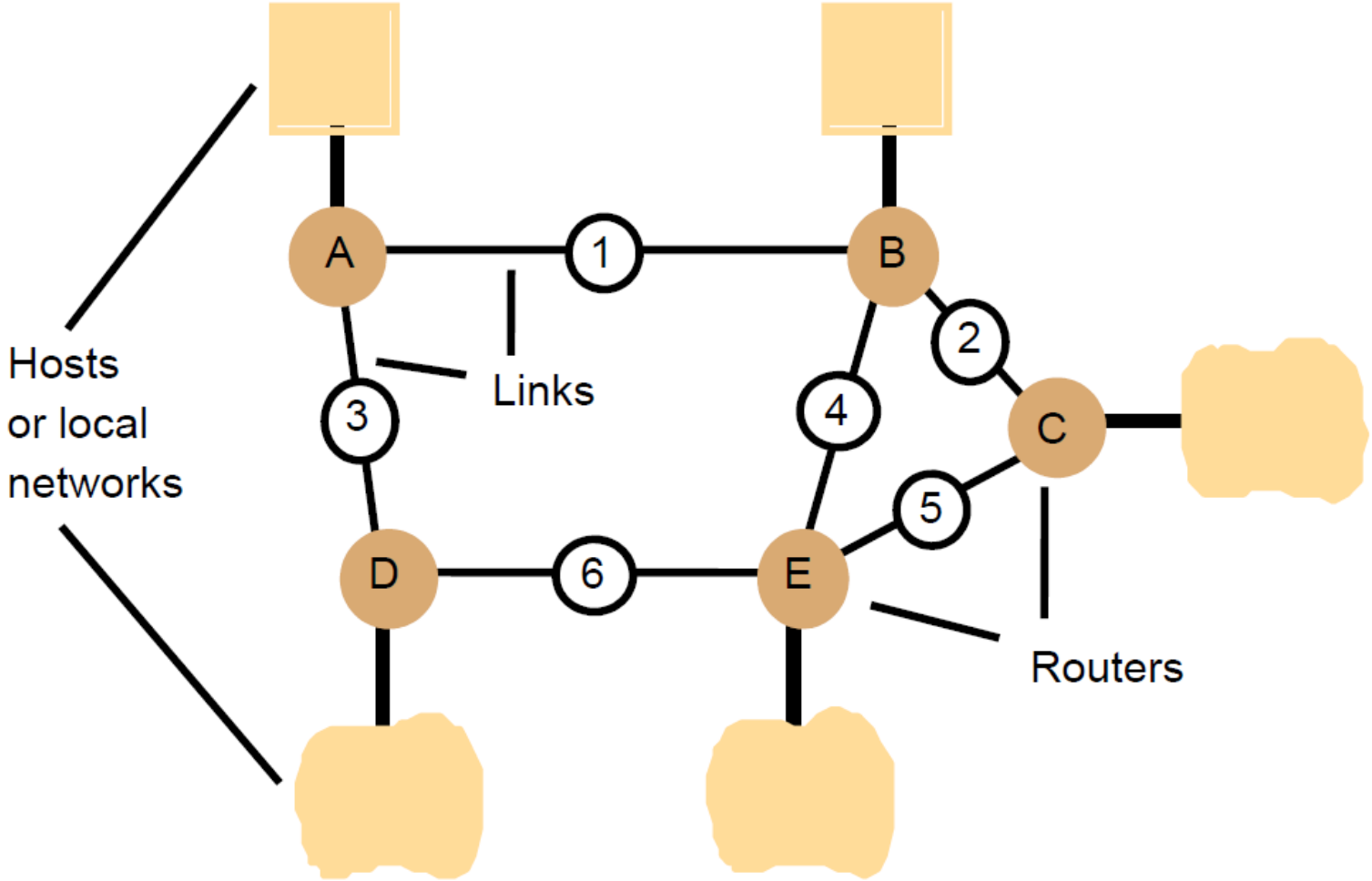

Routing Tables

Routings from A		
To	*Link*	*Cost*
A	local	0
B	1	1
C	1	2
D	3	1
E	1	2

Routings from B		
To	*Link*	*Cost*
A	1	1
B	local	0
C	2	1
D	1	2
E	4	1

Routings from C		
To	*Link*	*Cost*
A	2	2
B	2	1
C	local	0
D	5	2
E	5	1

Routings from D		
To	*Link*	*Cost*
A	3	1
B	3	2
C	6	2
D	local	0
E	6	1

Routings from E		
To	*Link*	*Cost*
A	4	2
B	4	1
C	5	1
D	6	1
E	local	0

Ports and Sockets

- A **port** is a *logical* connection to a computer (as opposed to a physical connection)

and is identified by a number in the range 1-65535.

- This number has no correspondence with the number of physical connections to the computer.
- Each port may be dedicated to a particular server/service).
- Port numbers in the range 1-1023 are normally set aside for the use of specified standard services, often referred to as 'well-known' services. (80 for web servers)

Common Ports

Protocol name	Port number	Nature of service
Echo	7	The server simply echoes the data sent to it. This is useful for testing purposes.
Daytime	13	Provides the ASCII representation of the current date and time on the server.
FTP-data	20	Transferring files. (FTP uses two ports.)
FTP	21	Sending FTP commands like PUT and GET.
Telnet	23	Remote login and command line interaction.
SMTP	25	E-mail. (Simple Mail Transfer Protocol.)
HTTP	80	HyperText Transfer Protocol (the World Wide Web protocol).
NNTP	119	Usenet. (Network News Transfer Protocol.)

Ports and Sockets

- Many clients would want the same service (Single port). e.g., port #80.
- The server, of course, needs some way of distinguishing between clients and keeping their dialogues separate from each other.
- A **socket** is an abstract concept used to indicate one of the two end-points of a communication link between two processes.
- Upon receiving the client's initial request (on a particular port number), the server will create a new socket at its end that will be dedicated to communication with that particular client.

Important Internet Services

- *Ping* (Packet InterNetwork Grouping)
- *FTP* (File Transfer Protocol)
- *HTTP* (Hypertext Transfer Protocol)
- *NNTP* (Network News Transfer Protocol)
- *SMTP* (Simple Mail Transfer Protocol)
- *POP3* (Post Office Protocol 3)
- *SNMP* (Simple Network Management Protocol)
- *Telnet* (Telecommunications Network)

Sockets

- A server can server many clients at the same time and needs some way of distinguishing between clients.
- A socket is an abstract concept (not a hardware element) used to indicate one endpoint of a link between two processes.
- A client creates a socket and send a request to the server.
- On receiving the request, the server create a new socket which is dedicated to the communication with that client.

IPv4 Addressing

- Every computer on an IP network is identified by a unique four-byte address (such as 203.64.88.11).
- Each number is in the range of 0 to 255.
- A packet header includes the destination address and the source address.
- Human aren't very good at numeric address. The Domain Name System **(**DNS**)** was developed to do the translation between symbolic hostnames (www.google.com) and numeric IP address.
- ***In Java, we may need to process both hostnames and IP addresses.***

Internet Address Classes

- Internet addresses are assigned by the Internet Network Information Center (**InterNIC**).
- IP addresses are allocated in blocks of two sizes called **Class B** and **Class C**.
- A **Class C** specifies the first three bytes of the address (eg. 203.64.88) which allows room for 254 addresses.
- .0 and .255 addresses are reserved and should never be assigned to hosts.
- A **Class B** address block only specifies the first two bytes which has room for roughly 65,000 hosts.
- Several address blocks and patterns are special. All 10. And 192. Address are deliberately unassigned. These **non-routable** addresses are useful for building private networks.

IPv6 Addressing

- Draft standard published on the 1998-08-10.
- Uses 128-bit addresses, which provide massively more addresses.
- Many common Internet applications already work with IPv6.
- IPv6 will gradually replace IPv4, with the two coexisting for a number of years during a transition period.

IP, TCP, & UDP

- Since IP was developed with military sponsorship :
  - designed to be **robust** (allow multiple routes between any two points), **open** and **platform-independent**.
- Since IP packets of the same data stream may not take the same route, TCP was added to:
  - acknowledge receipt of IP packets
  - request retransmission of lost packets
  - put back together the packet order
- TCP carries high overhead. UDP is used when the packet order isn't that important, and when packet lost won't completely corrupt the data stream.
- Error correction codes can be built into UDP.

TCP Overview

- Services:
  - Reliable packet delivery
  - Virtual connection service
- Responsibilities:
  - Breaking messages into datagrams
  - Reassembling datagrams at the destination
  - Resending lost or corrupted datagrams
- Connection-oriented, using three sockets
  - Sending socket: clients request a service
  - Listening socket: servers listen for connection attempts
  - Receiving socket: servers process service requests

Layers

- A set of related communication functions that can be managed and grouped together
- Application Layer: communications functions that are used by application programs
  - HTTP, DNS, SMTP (email)
- Transport Layer: end-to-end communications between two processes in two machines
  - TCP, User Datagram Protocol (UDP)
- Network Layer: node-to-node communications between two machines
  - Internet Protocol (IP)

TCP/IP Layers

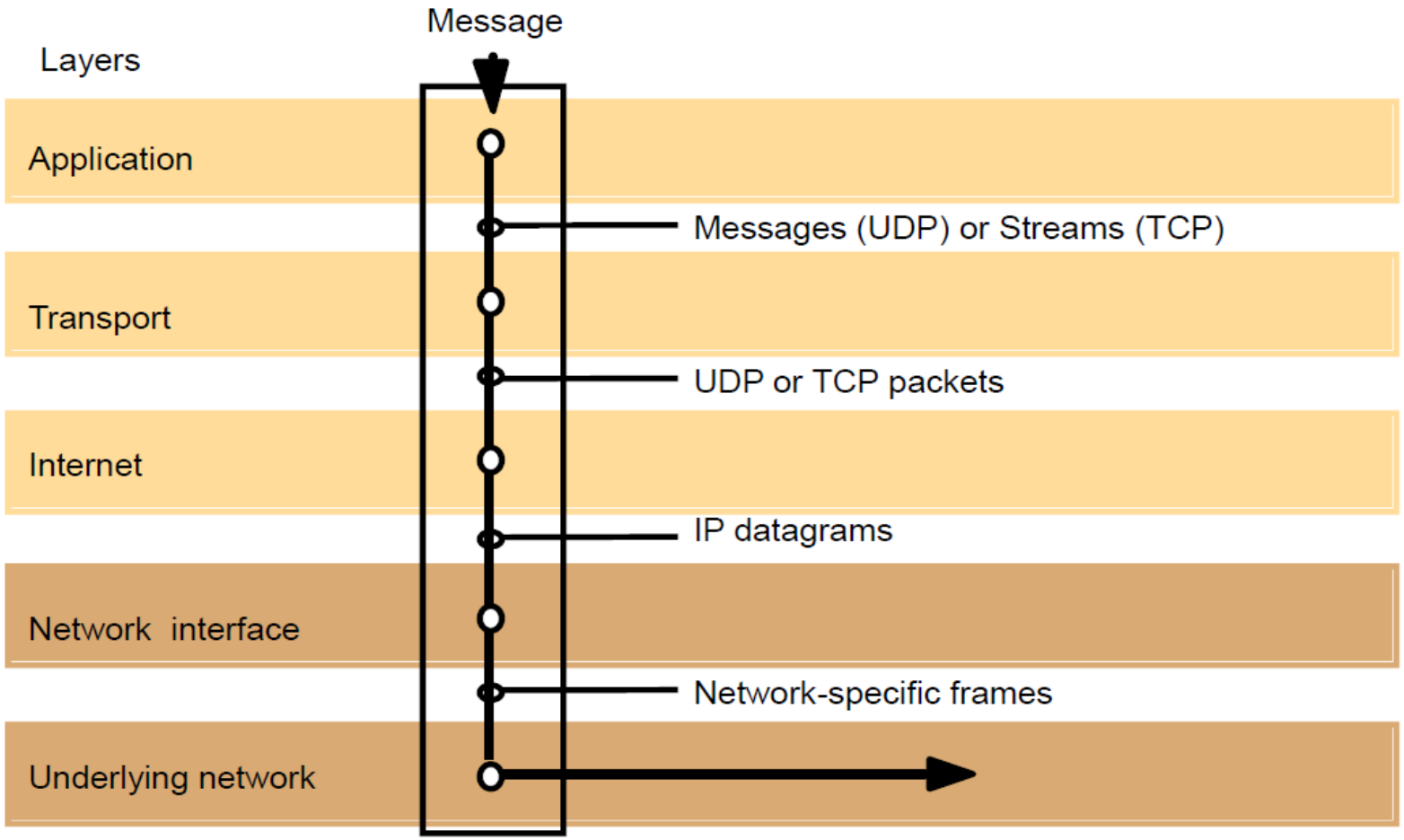

TCP/IP Features

- Encapsulation
- IP Addressing
  - IPv4 address structure
  - Address resolution
- IP Routing
- IPv6
- MobileIP
- DNS
- Firewall security

TCP/IP Encapsulation (Ethernet)

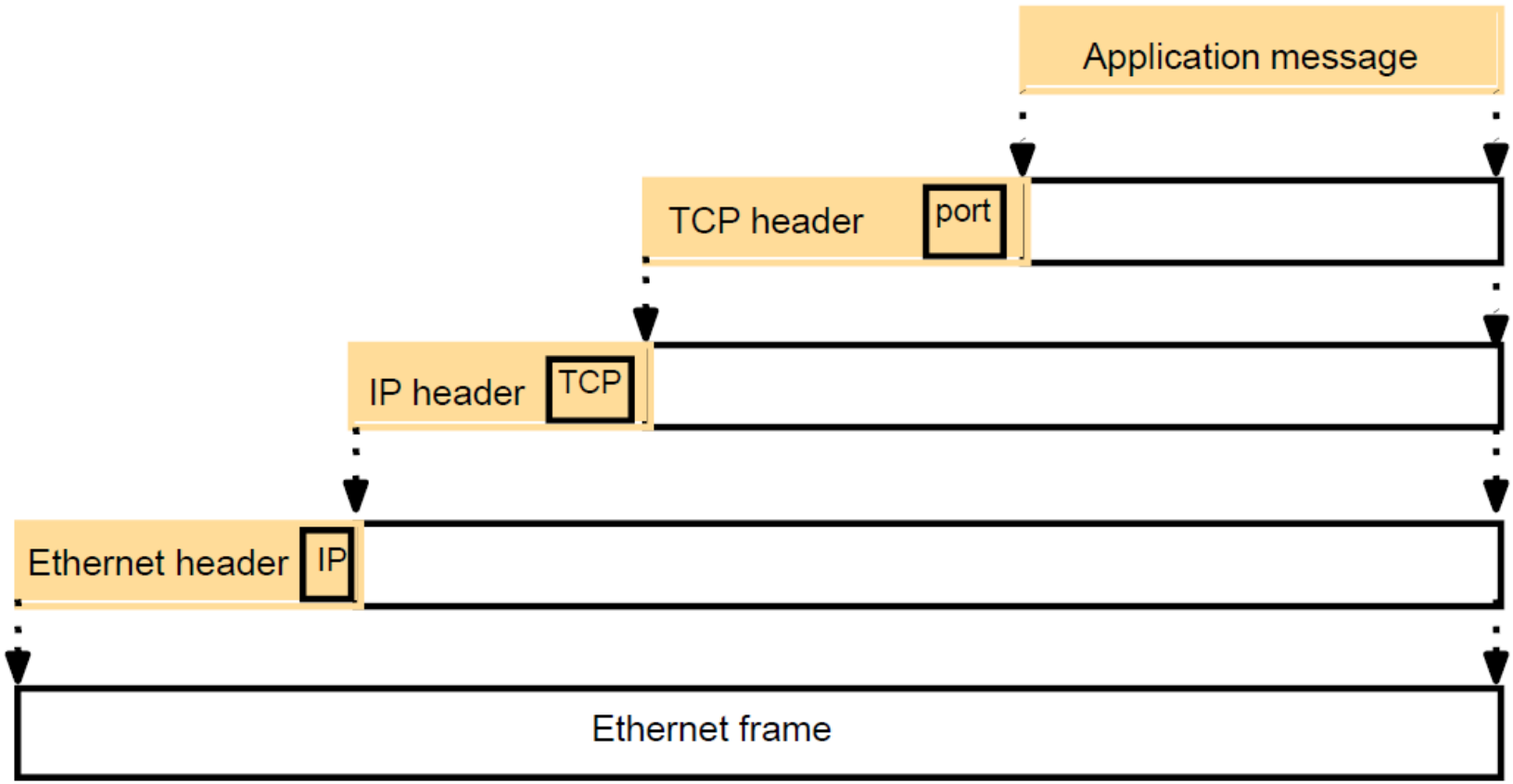

UDP Overview

- A one-shot network service
- Also uses sockets, but destroyed after a UDP datagram is sent or received
- No error correction or retransmission
- Works best with small, independent packets of information
- Good for application scenarios such as:
  - Multimedia streaming
  - Network discovery services
  - Control services
  - Basic information services

Multicasting

- Have a packet delivered to multiple destinations on the same or across multiple networks.
- Broadcasting can only reach recipients on the same network.
- Transmits the packet to a host group with its own IP address.
- Clients joint the group by listening on the same multicast IP address.
- Some host groups are permanent while others are transient.
- Membership is dynamic – hosts may join and leave the group at any time.

Firewall & Proxy Servers

- The h/w and s/w that sits between the Internet and the local network, checking all incoming and outgoing data, to make sure it's kosher, is called a **firewall**.
- The most basic firewall is a **packet filter**.
- Filtering is usually based on network addresses and ports.
- The **proxy server** stands between clients and the server. All requests are sent to proxy server first. Only pages not in the **cache** need to be requested from the remote servers.
- Proxy servers allow some performance and security advantages. Access through the proxy servers can be tightly controlled.
- The biggest problem is they only know a few protocols. It limits the effectiveness of custom protocols.

Example: general Steps taken to retrieve a webpage and protocols used

1. DNS

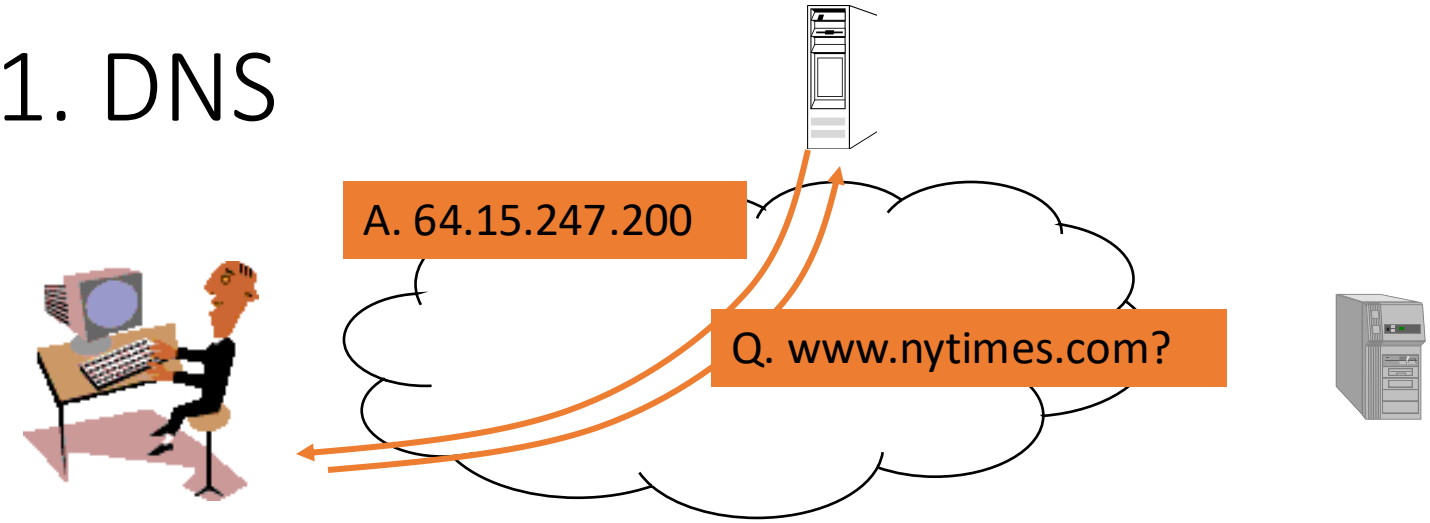

- User clicks on http://www.nytimes.com/
- URL contains Internet name of machine (www.nytimes.com), but not Internet address
- Internet needs Internet address to send information to a machine
- Browser software uses Domain Name System (DNS) protocol to send query for Internet address
- DNS system responds with Internet address

2. TCP

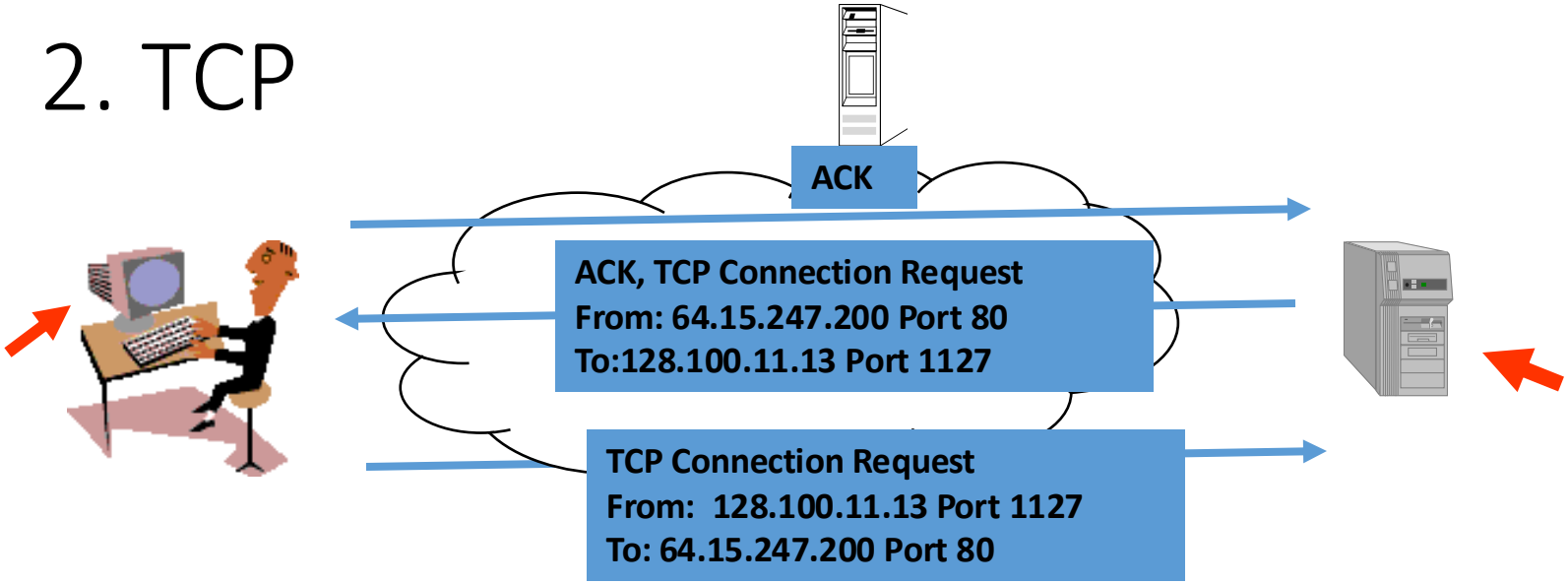

- Browser software uses HyperText Transfer Protocol (HTTP) to send request for document
- HTTP server waits for requests by listening to a well-known port number (80 for HTTP)
- HTTP client sends request messages through an "ephemeral port number," e.g. 1127
- HTTP needs a Transmission Control Protocol (TCP) connection between the HTTP client and the HTTP server to transfer messages reliably

3. HTTP

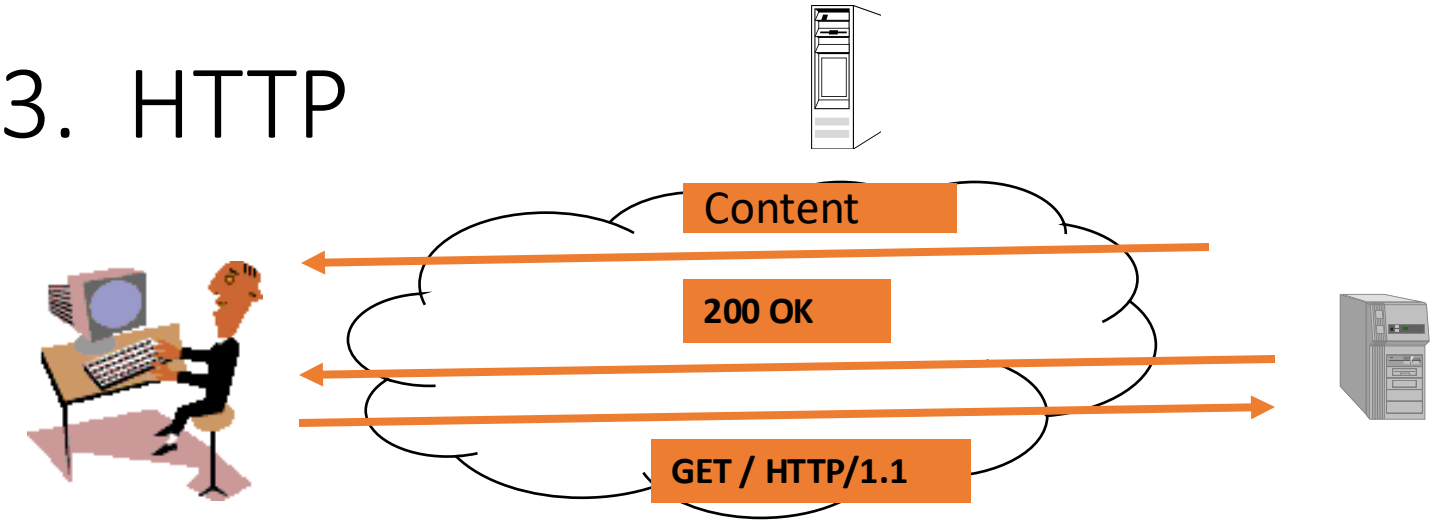

- HTTP client sends its request message: “GET …”
- HTTP server sends a status response: “200 OK”
  - What f not OK? What is the Code ? 404
- HTTP server sends requested file
- Browser displays document

- Clicking a link sets off a chain of events across the Internet!
- Let’s see how protocols & layers come into play…

Example: HTTP

- HTTP is an application layer protocol
- Retrieves documents on behalf of a browser application program
- HTTP specifies fields in request messages and response messages
  - Request types; Response codes
  - Content type, options, cookies, …
- HTTP specifies actions to be taken upon receipt of certain messages

HTTP Protocol

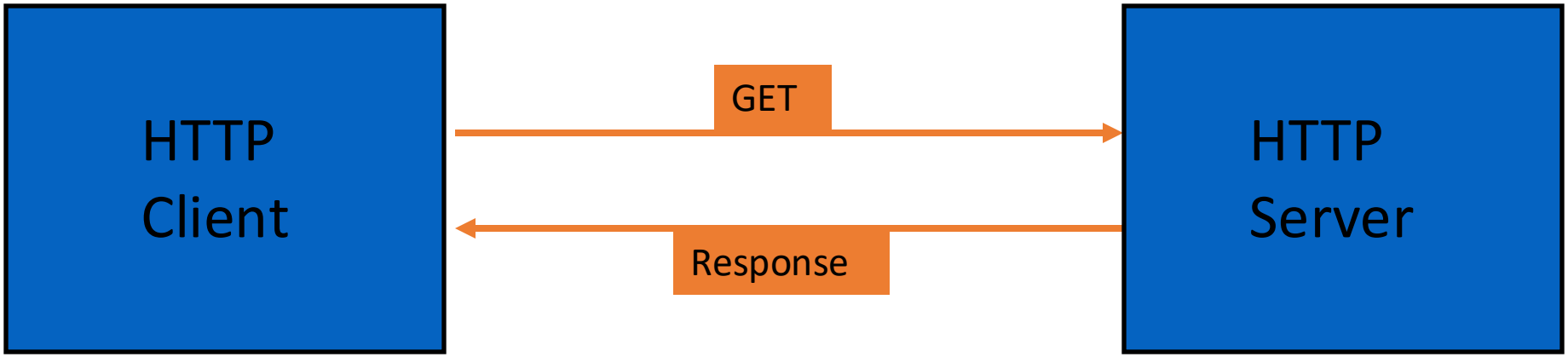

- HTTP assumes messages can be exchanged directly between HTTP client and HTTP server
- In fact, HTTP client and server are processes running in two different machines across the Internet
- HTTP uses the reliable stream transfer service provided by TCP

Example: TCP

- TCP is a transport layer protocol
- Provides *reliable byte stream service* between two processes in two computers across the Internet
- Sequence numbers keep track of the bytes that have been transmitted and received
- Error detection and retransmission used to recover from transmission errors and losses
- TCP is *connection-oriented*: the sender and receiver must first establish an association and set initial sequence numbers before data is transferred
- Connection ID is specified uniquely by

(send port #, send IP address, receive port #, receiver IP address)

HTTP uses service of TCP

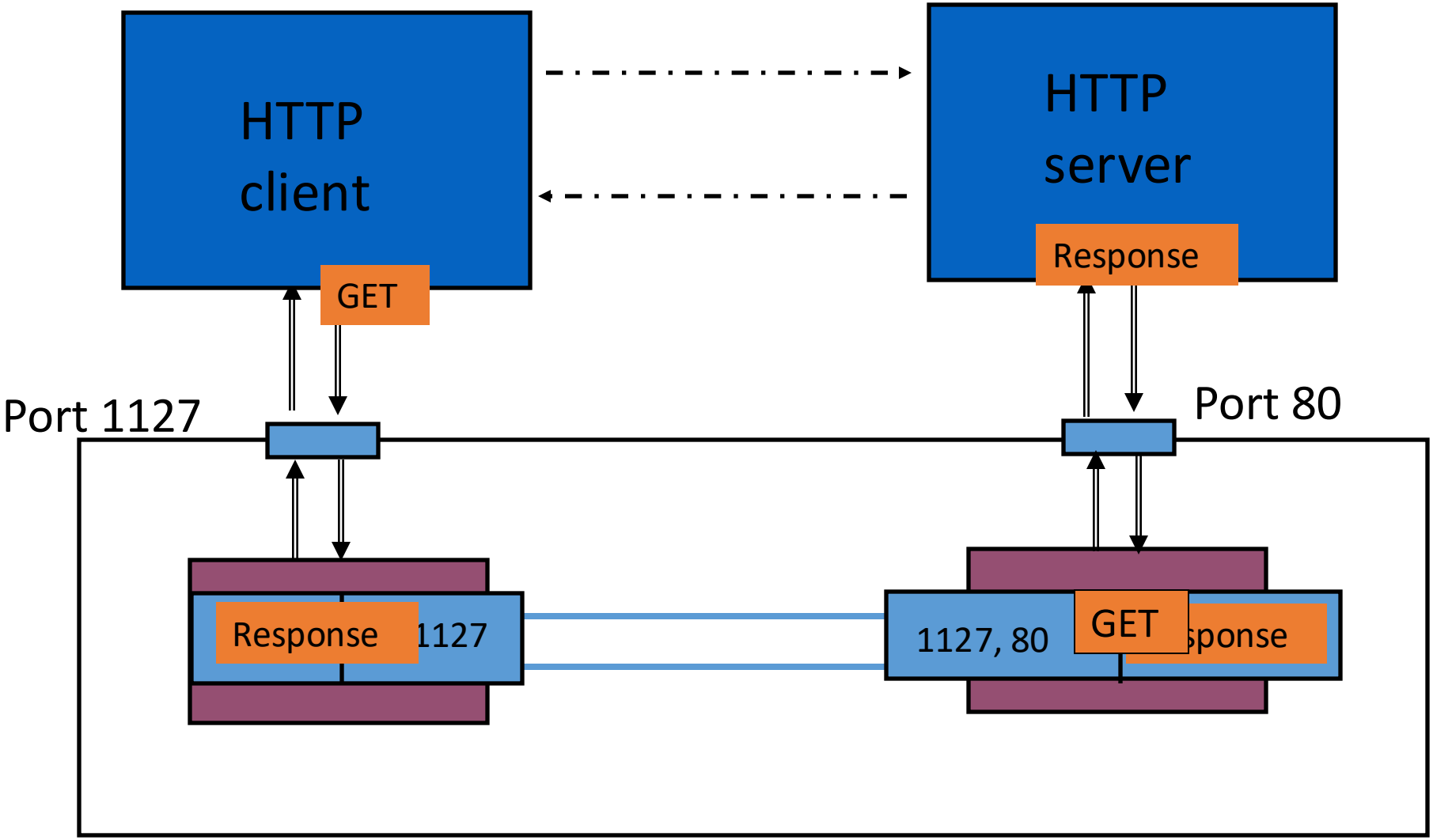

Example: DNS Protocol

- DNS protocol is an application layer protocol
- DNS is a distributed database that resides in multiple machines in the Internet
- DNS protocol allows queries of different types
  - Name-to-address or Address-to-name
  - Mail exchange
- DNS usually involves short messages and so uses service provided by UDP
- Well-known port 53

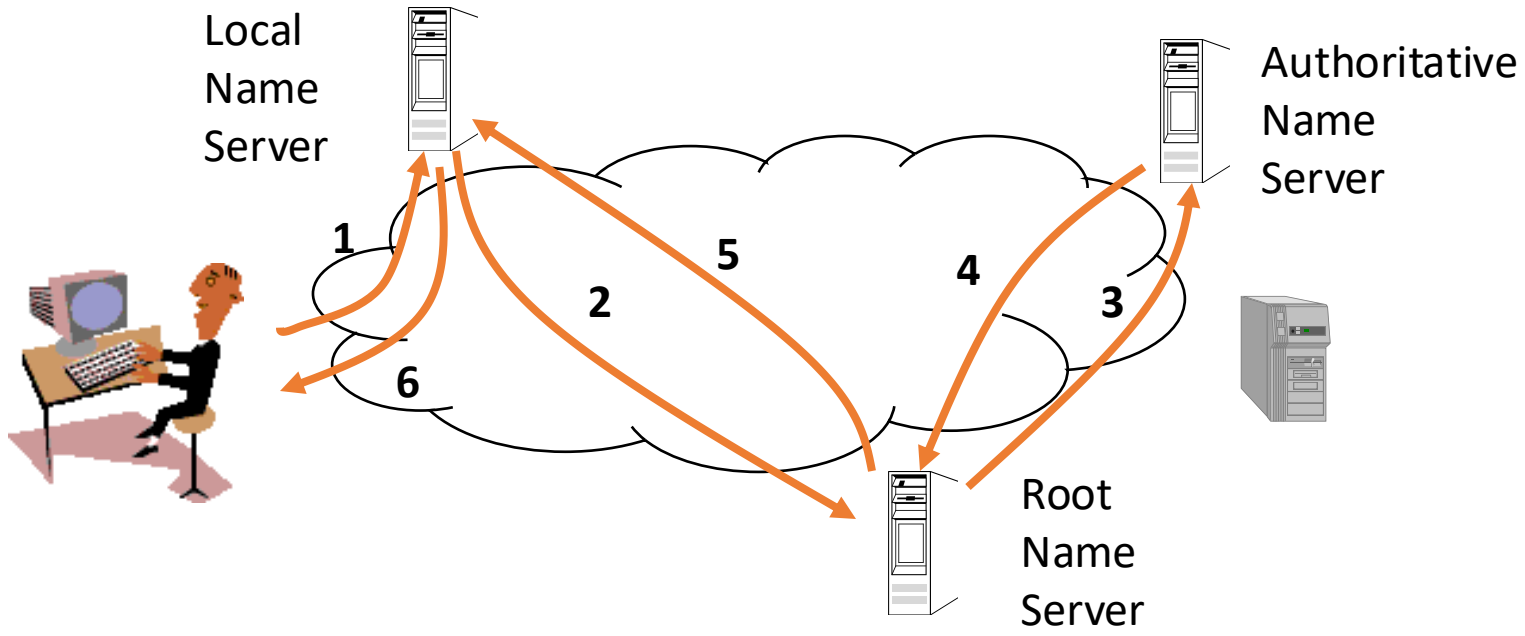

- Local Name Server: resolve frequently-used names
  - University department, ISP
  - Contacts Root Name server if it cannot resolve query
- Root Name Servers: 13 globally
  - Resolves query or refers query to Authoritative Name Server
- Authoritative Name Server: last resort
  - Every machine must register its address with at least two authoritative name servers

Example: User Datagram Protocol

- UDP is a transport layer protocol
- Provides *best-effort datagram service* between two processes in two computers across the Internet
  - it doesn't guarantee that each packet will arrive;
  - it doesn't guarantee that packets will be in the right order.
- Port numbers distinguish various processes in the same machine
- UDP is *connectionless*
- Datagram is sent immediately
- Quick, simple, but not reliable